Contents

Introduction 2
In Brief 5
Keys, Doors, and Windows 23
Seats and Restraints 51
Storage 91
Instruments and Controls 93
Lighting 138
Infotainment System 145
Climate Controls 146
Driving and Operating 153
Vehicle Care 202
Service and Maintenance 270
Technical Data 276
Customer Information 281
OnStar 286
Index 291

Introduction

The names, logos, emblems, slogans, vehicle model names, and vehicle body designs appearing in this manual including, but not limited to, GM, the GM logo, CHEVROLET, the CHEVROLET Emblem, CAMARO, and the CAMARO Emblem are trademarks and/or service marks of General Motors LLC, its subsidiaries, affiliates, or licensors.

This manual describes features that may or may not be on the vehicle because of optional equipment that was not purchased on the vehicle, model variants, country specifications, features/applications that may not be available in your region, or changes subsequent to the printing of this owner manual.

Refer to the purchase documentation relating to your specific vehicle to confirm the features.

Keep this manual in the vehicle for quick reference.

Using this Manual

To quickly locate information about the vehicle, use the Index in the back of the manual. It is an alphabetical list of what is in the manual and the page number where it can be found.

Danger, Warning, and Caution

Warning messages found on vehicle labels and in this manual describe hazards and what to do to avoid or reduce them.

⚠ Danger
Danger indicates a hazard with a high level of risk which will result in serious injury or death.

⚠ Warning
Warning indicates a hazard that could result in injury or death.

Caution
Caution indicates a hazard that could result in property or vehicle damage.



A circle with a slash through it is a safety symbol which means “Do Not,” “Do not do this,” or “Do not let this happen.”

Symbols

The vehicle has components and labels that use symbols instead of text. Symbols are shown along with

the text describing the operation or information relating to a specific component, control, message, gauge, or indicator.

: Shown when the owner's manual has additional instructions or information.

: Shown when the service manual has additional instructions or information.

: Shown when there is more information on another page — "see page."

Vehicle Symbol Chart

Here are some additional symbols that may be found on the vehicle and what they mean. For more information on the symbol, refer to the Index.

: Airbag Readiness Light

: Air Conditioning

: Antilock Brake System (ABS)

: Audio Steering Wheel Controls

: Brake System Warning Light

: Charging System

: Cruise Control

: Do Not Puncture

: Do Not Service

: Engine Coolant Temperature

: Exterior Lamps

: Flame/Fire Prohibited

: Fog Lamps

: Fuel Gauge

: Fuses

: Headlamp Main/Dipped-Beam Changer

: Malfunction Indicator Lamp

: Oil Pressure

: Power

: Remote Vehicle Start

: Safety Belt Reminders

: Tyre Pressure Monitor

: Traction Control/StabiliTrak®

: Under Pressure

: Windscreen Washer Fluid

✍ NOTES

In Brief

Instrument Panel
Instrument Panel 6

Initial Drive Information
Initial Drive Information 8
Remote Keyless Entry (RKE) System 8
Remote Vehicle Start 9
Door Locks 9
Boot Release 9
Windows 10
Seat Adjustment 10
Memory Features 11
Heated and Ventilated Seats ... 11
Head Restraint Adjustment 11
Safety Belts 12
Passenger Sensing System ... 12
Mirror Adjustment 12
Steering Wheel Adjustment 13
Interior Lighting 13
Exterior Lighting 14
Windscreen Wiper/Washer 14
Climate Controls 15
Transmission 16

Vehicle Features
Infotainment System 17
Steering Wheel Controls 17
Cruise Control 18
Driver Information Centre (DIC) 18
Rear Vision Camera (RVC) 19
Rear Cross Traffic Alert (RCTA) System 19
Parking Assist 19
Power Sockets 19
Sunroof 19
Convertible 20

Performance and Maintenance
Traction Control/Electronic Stability Control 20
Tyre Pressure Monitor 21
Fuel 21
Engine Oil Life System 21
Car Wash Guidelines 22
Driving for Better Fuel Economy 22

Instrument Panel

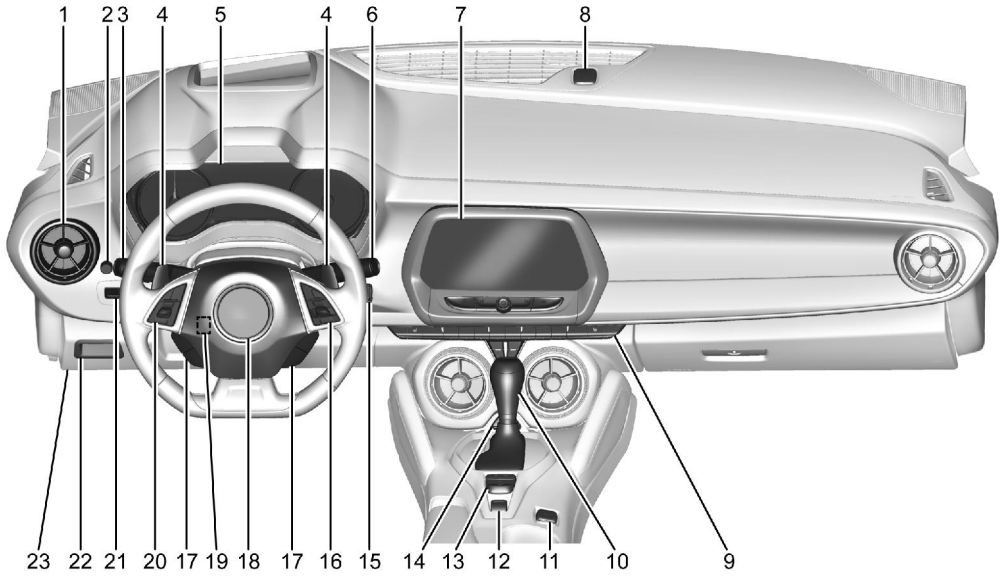

1. *Air Vents* ⇨ *152*.
2. *Instrument Panel Illumination Control* ⇨ *142*.
3. *Exterior Lamp Controls* ⇨ *138*.

   Indicator Lever. See *Indicator and Lane-Change Signals* ⇨ *141*.

   Headlamp Main/Dipped-Beam Changer ⇨ *139*.
4. Tap Shift (If Equipped). See *Manual Mode* ⇨ *175*.

   Active Rev Match ⇨ *178* (If Equipped).
5. *Instrument Cluster* ⇨ *99*.
6. *Windscreen Wiper/ Washer* ⇨ *95*.
7. *Infotainment* ⇨ *145*.
8. Light Sensor. See *Automatic Headlamp System* ⇨ *139*.
9. *Automatic Climate Control System* ⇨ *146* or *Dual Automatic Climate Control System* ⇨ *149* (If Equipped).

   Heated and Ventilated Front Seats ⇨ *56* (If Equipped).
10. Shift Lever. See *Automatic Transmission* ⇨ *173* or *Manual Transmission* ⇨ *178*.
11. *Power Sockets* ⇨ *96*.
12. *Electric Parking Brake* ⇨ *180*.
13. *Traction Control/Electronic Stability Control* ⇨ *182*.

    Driver Mode Control ⇨ *184*.
14. *Hazard Warning Flashers* ⇨ *141*.
15. ENGINE START/STOP Button. See *Ignition Positions* ⇨ *166*.
16. *Steering Wheel Controls* ⇨ *94*.
17. Audio Controls. See *Steering Wheel Controls* ⇨ *94*.
18. *Horn* ⇨ *95*.
19. *Steering Wheel Adjustment* ⇨ *94*.
20. *Cruise Control* ⇨ *190*.

    Heated Steering Wheel ⇨ *94* (If Equipped).
21. *Head-Up Display (HUD)* ⇨ *117* (If Equipped).
22. *Headlamp Levelling Control* ⇨ *140*.
23. Data Link Connector (DLC) (Out of View). See *Malfunction Indicator Lamp (Check Engine Light)* ⇨ *109*.

    Bonnet Release (Out of View). See *Bonnet* ⇨ *204*.

Initial Drive Information

This section provides a brief overview about some of the important features that may or may not be on your specific vehicle.

For more detailed information, refer to each of the features which can be found later in this owner manual.

Remote Keyless Entry (RKE) System

The Remote Keyless Entry (RKE) transmitter may be used to lock and unlock the doors from up to 60 m (197 ft) away from the vehicle.



With Remote Start Shown

Press the key release button near the bottom of the transmitter to remove the key. The key can be used for all locks.

Press to unlock the driver door or all doors depending on the vehicle personalisation settings.

Press to lock all doors.

Unlock feedback can be personalised. See *Vehicle Personalisation* ⇨ *131*.

Press twice quickly to release the boot.

If equipped, press and release and then immediately press and hold continuously to open the convertible top all the way. The vehicle must be off to operate the convertible top with the RKE transmitter. The top will stop movement approximately one second after is released. To stop the top immediately, press , , or on the RKE transmitter. will only open the convertible top. See *Remote Keyless Entry (RKE) System Operation* ⇨ *45* and *Convertible Top* ⇨ *45*.

Press and release to initiate vehicle locator.

Press and hold for at least three seconds to sound the panic alarm.

Press again to cancel the panic alarm.

See *Keys* ⇨ *23* and *Remote Keyless Entry (RKE) System Operation* ⇨ *24*.

Remote Vehicle Start

If equipped, the engine can be started from outside of the vehicle.

Starting the Vehicle

1. Press and release on the RKE transmitter.
2. Immediately press and hold for at least four seconds or until the indicator lamps flash.

Start the vehicle normally after entering.

When the vehicle starts, the parking lights will turn on.

Remote start can be extended.

Cancelling a Remote Start

To cancel a remote start, do one of the following:

- Press and hold until the parking lamps turn off.
- Turn on the hazard warning lights.
- Turn the vehicle on and then off.

See *Remote Vehicle Start* ⇨ *29*.

Door Locks

To lock or unlock a door from the outside, press or on the Remote Keyless Entry (RKE) transmitter or use the key in the door. The key lock cylinder is covered with a cap. See *Door Locks* ⇨ *31*.

For Keyless Access, press the button on the door handle when the RKE transmitter is within 1 m (3 ft). See *Remote Keyless Entry (RKE) System Operation* ⇨ *24*.

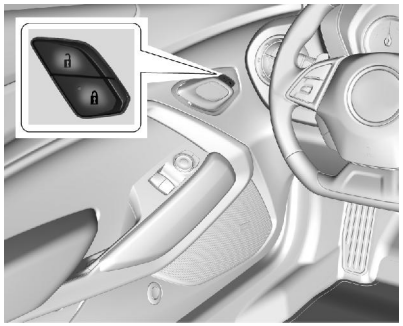

To lock or unlock a door from the inside, press or on the power door lock switch.

Pull once on a door handle to unlock it and again to open it.

See *Power Door Locks* ⇨ *33*.

Boot Release

To open the boot:

- Press the boot release button on the lower portion of the driver door.
- Press twice quickly on the RKE transmitter.
- Press the touch pad in the area above the number plate after unlocking all doors.

See *Boot* ⇨ *34*.

Windows

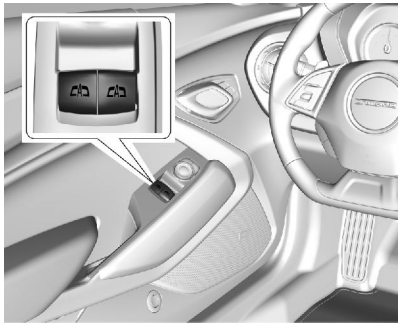

Coupe Shown, Convertible Similar

The power window switches on the driver door control all windows. The window switch on the passenger door is only for that window. Press the switch to open the window. Pull the switch to close it. See *Windows* ⇨ *41*.

The switches work when the ignition is in ON/RUN or ACC/ ACCESSORY, or in Retained Accessory Power (RAP). See *Retained Accessory Power (RAP)* ⇨ *170*.

Seat Adjustment

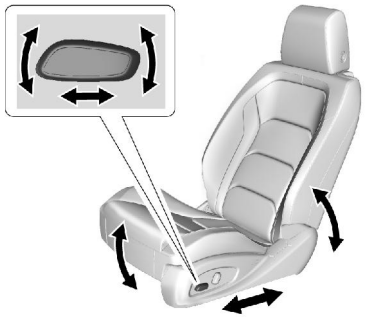

To adjust the seat:

- Move the seat forward or rearward by sliding the horizontal control forward or rearward.
- Raise or lower the front part of the seat cushion by moving the front of the horizontal control up or down.
- Raise or lower the entire seat by moving the entire horizontal control up or down.

See *Electrically Operated Seat Adjustment* ⇨ *52*.

Reclining Seat Backrests

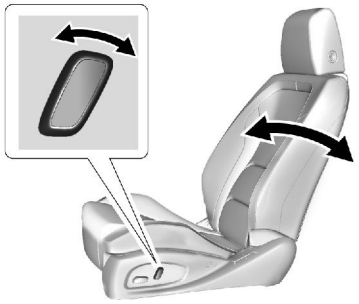

To raise or recline the seatback, tilt the vertical control forward or rearward. See *Reclining Seat Backrests* ⇨ *53*.

Memory Features

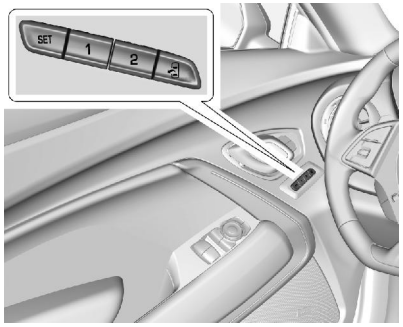

If equipped, the 1, 2, SET, and (Exit) buttons on the driver door are used to manually store and recall memory settings for the driver seat and outside mirrors.

Automatic Memory Recall may be enabled in the personalisation menus to automatically recall positions stored to the 1, 2, and buttons.

See *Memory Seats* ⇨ *54* and *Vehicle Personalisation* ⇨ *131*.

Heated and Ventilated Seats



If available, the engine must be running to operate.

Press or to turn on the heated seat. A light indicates this feature is on. Press or to turn on the ventilated seat. A light indicates this feature is on. Press the button once for the highest setting. With each press of the button, the heated or ventilated seat will change to the next lower setting, and then the off setting. Three lights indicate the highest setting, and one light indicates the lowest.

See *Heated and Ventilated Front Seats* ⇨ *56*.

Head Restraint Adjustment

Do not drive until the head restraints for all occupants are installed and adjusted properly.

To achieve a comfortable seating position, change the seatback recline angle as little as necessary while keeping the seat and the head restraint height in the proper position.

See *Head Restraints* ⇨ *52* and *Electrically Operated Seat Adjustment* ⇨ *52*.

Safety Belts

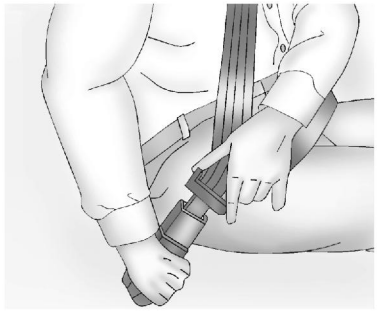

Refer to the following sections for important information on how to use safety belts properly:

- *Seat Belts* ⇨ *58*.
- *How to Wear Safety Belts Properly* ⇨ *59*.
- *Three-Point Belt* ⇨ *60*.
- *ISOFIX Child Restraint Systems* ⇨ *86*.

Passenger Sensing System



The passenger sensing system will turn off the front outboard passenger frontal airbag and knee airbag under certain conditions. No other airbag is affected by the passenger sensing system. See *Passenger Sensing System* ⇨ *70*.

The passenger airbag status indicator lights on the overhead console are visible when the vehicle is started. See *Passenger Airbag Status Indicator* ⇨ *108*.

Mirror Adjustment

Exterior

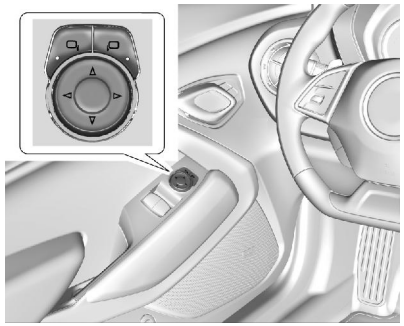

To adjust each mirror:

1. Press ◻◂ or ▸◻ to select the driver or passenger side mirror. The indicator light will illuminate.
2. Press the arrows on the control pad to move the mirror in the desired position.

See *Power Mirrors* ⇨ *40*.

Interior

Adjust the inside rearview mirror for a clear view of the area behind your vehicle.

If equipped, push the tab forward for daytime use and pull it rearward for night-time use to avoid the glare of headlights from behind.

If equipped with an automatic dimming rear-view mirror, the glare of the headlights from behind is automatically reduced. The dimming feature comes on when the vehicle is started. See *Interior Rearview Mirrors* ⇨ *41*.

Steering Wheel Adjustment



To adjust the tilt and telescoping steering wheel:

1. Pull the lever down.
2. Move the steering wheel up or down.
3. Pull or push the steering wheel closer or away from you.
4. Pull the lever up to lock the steering wheel in place.

Do not adjust the steering wheel while driving.

Interior Lighting

Reading Lamps

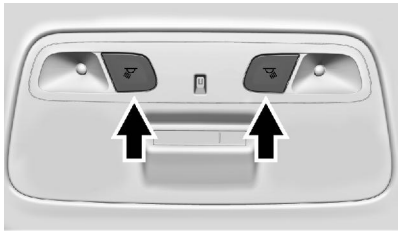

The reading lamps are in the overhead console. The lamps go on when a door is opened. When the doors are closed, press or to turn on each lamp.

For more information on interior lighting, see *Instrument Panel Illumination Control* ⇨ *142*.

Exterior Lighting

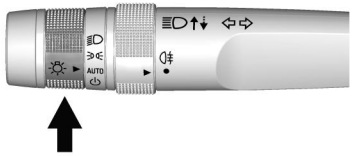

The exterior lamp control is on the instrument panel, on the outboard side of the steering wheel.

There are four positions:

⏻ : Briefly turn to this position to turn the automatic light control off or on again. When released, the control returns to the AUTO position.

AUTO : Automatically turns the exterior lamps on and off, depending on outside lighting.

: Turns on the parking lamps including all lamps, except the headlamps.

: Turns on the headlamps together with the parking lamps and instrument panel lights.

: Press to turn the rear fog lamps on or off.

See:

- *Exterior Lamp Controls* ⇨ *138.*

Windscreen Wiper/ Washer

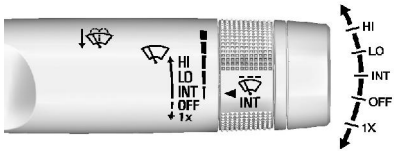

The window wiper/washer lever is on the right side of the steering column. With the ignition in ACC/ ACCESSORY or ON/RUN, move the window wiper lever to select the wiper speed.

HI : Use for fast wipes.

LO : Use for slow wipes.



INT : Move the lever up to INT for intermittent wipes, then turn the INT band up for more frequent wipes or down for less frequent wipes.

OFF : Use to turn the wipers off.

1X : For a single wipe, briefly move the wiper lever down. For several wipes, hold the wiper lever down.

: Pull the windscreen wiper lever toward you to spray windscreen washer fluid and activate the wipers.

See *Windscreen Wiper/ Washer* ⇨ *95.*

Climate Controls

The heating, cooling, defrosting, and ventilation for the vehicle can be controlled with this system.

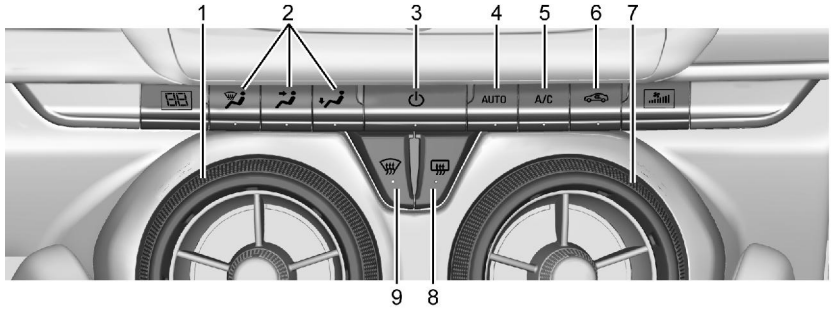

Automatic Climate Control System

1. Temperature Control
2. Air Delivery Mode Controls
3. ⏻ (Power)
4. AUTO (Automatic Operation)
5. A/C (Air Conditioning)
6. Recirculation
7. Fan Control
8. Rear Window Demister
9. Defrost

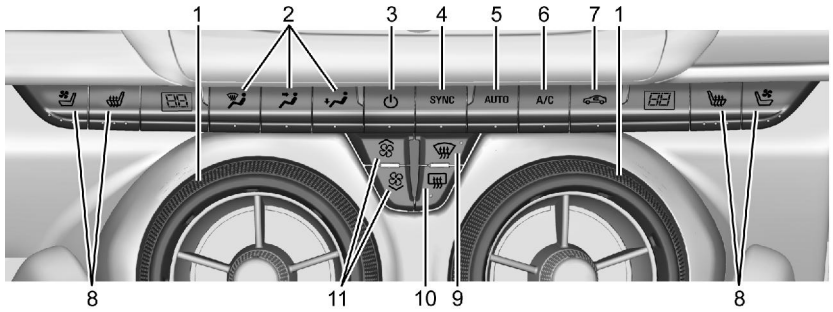

Dual Automatic Climate Control System

1. Driver and Passenger Temperature Controls
2. Air Delivery Mode Controls
3. ⏻ (Power)
4. SYNC (Synchronised Temperature)
5. AUTO (Automatic Operation)
6. A/C (Air Conditioning)
7. Recirculation
8. Driver and Passenger Heated and Ventilated Seats (If Equipped)
9. Defrost
10. Rear Window Demister
11. Fan Control

See *Automatic Climate Control System* ⇨ *146* and *Dual Automatic Climate Control System* ⇨ *149* (If Equipped).

Transmission

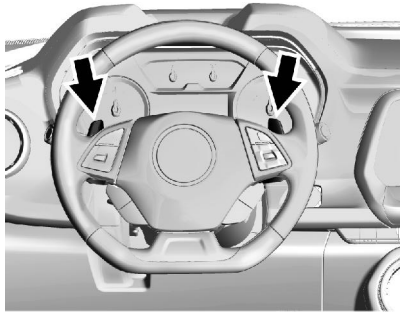

Automatic Transmission

Tap Shift

Tap Shift allows you to manually control the automatic transmission. To use Tap Shift, the gear lever must be in DSC Mode. Vehicles with this feature have indicators on the steering wheel. The paddles are on the back of the steering wheel. Tap the left paddle (−) to downshift, and the right paddle (+) to upshift.
A Driver Information Centre (DIC) display indicates the gear the vehicle is in.

To use this feature:

1. Move the gear lever to Manual Mode.
2. Tap the left paddle (−) or right paddle (+), to increase or decrease the gear range available.

See *Manual Mode* ⇨ *175*.

Manual Gearbox

One to Four Shift Message (V8 Only)

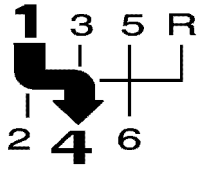

When this message comes on, you can only shift from 1 (First) to 4 (Fourth) instead of 1 (First) to 2 (Second). The message will be displayed in the Driver Information Centre (DIC). See *Manual Transmission* ⇨ *178*.

Active Rev Match (V8 Only)

Vehicles equipped with a V8 engine and manual gearbox have Active Rev Match (ARM). ARM aids in smoother shifting by matching the engine speed to the next selected gear. It is activated and deactivated by pressing either of the paddles marked REV MATCH on the steering wheel. See *Active Rev Match* ⇨ *178*.

Vehicle Features

Infotainment System

See the infotainment manual for information on the radio and available features.

Steering Wheel Controls

The infotainment system can be operated by using the steering wheel controls. See "Steering Wheel Controls" in the infotainment manual.

Cruise Control

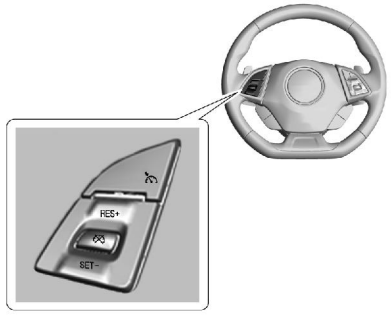

Cruise Control with Cancel Button

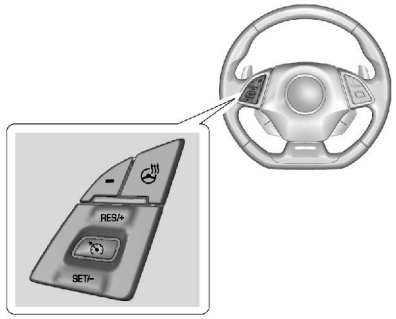

Cruise Control without Cancel Button

: If equipped, press to turn the system on and off. A white indicator appears in the instrument cluster when cruise is turned on.

: If equipped, press to disengage cruise control without erasing the set speed from memory.

RES+ : If there is a set speed in memory, press briefly to resume to that speed or hold upward to accelerate. If cruise control is already active, use to increase vehicle speed.

SET− : Press briefly to set the speed and activate cruise control. If cruise control is already active, use to decrease speed.

See *Cruise Control* ⇨ *190*.

Driver Information Centre (DIC)

The DIC display is in the instrument cluster. It shows the status of many vehicle systems.

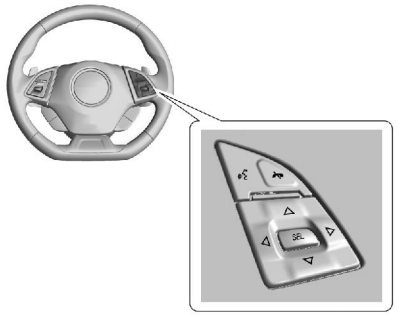

△ **or** ▽ : Press to move up or down in a list.

◁ **or** ▷ **:** Press ◁ to open application menus on the left. Press ▷ to open interaction menus on the right.

SEL : Press to select a menu item. Press and hold to reset values on certain screens.

See *Driver Information Centre (DIC)* ⇨ *116*.

Rear Vision Camera (RVC)

If equipped, RVC displays a view of the area behind the vehicle on the infotainment display when the vehicle is shifted into R (Reverse) to aid with parking and low-speed reversing manoeuvres.

See *Assistance Systems for Parking or Reversing* ⇨ *193*.

Rear Cross Traffic Alert (RCTA) System

If equipped, the RCTA system uses a triangle with an arrow displayed on the RVC screen to warn of traffic behind your vehicle that may cross your vehicle's path while in R (Reverse). In addition, beeps will sound.

See *Assistance Systems for Parking or Reversing* ⇨ *193*.

Parking Assist

If equipped, Rear Parking Assist (RPA) uses sensors on the rear bumper to assist with parking and avoiding objects while in R (Reverse). It operates at speeds less than 8 km/h (5 mph). RPA may display a warning triangle on the Rear Vision Camera screen and/or a graphic on the instrument cluster to provide the object distance. In addition, multiple beeps may occur if very close to an object.

See *Assistance Systems for Parking or Reversing* ⇨ *193*.

Power Sockets

The vehicle has an accessory power socket on the centre floor console in front of the cupholders. It can be used to plug in electrical equipment, such as a mobile phone or an MP3 player.

The accessory power socket does not work when the ignition is turned off and the driver door is opened. This helps to preserve the battery life of the vehicle.

See *Power Sockets* ⇨ *96*.

Sunroof

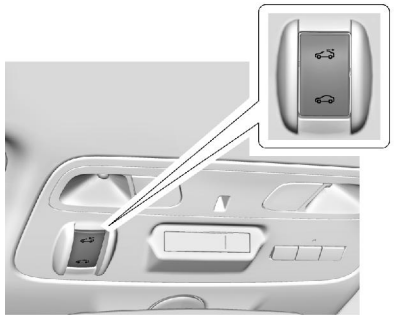

The sunroof only operates when the ignition is in ON/RUN or ACC/ ACCESSORY, or if Retained

Accessory Power (RAP) is active. See *Retained Accessory Power (RAP)* ⇨ *170*.

If equipped, the sunroof switch is on the overhead console.

Open/Close (Manual Mode) :
Press and hold to open the sunroof. Press and hold to close the sunroof. Release the switch to stop the movement.

Express-Open/Express-Close :
Press to the second detent and release to express-open the sunroof. Press to the second detent and release to express-close the sunroof. Press the switch again to stop the movement.

Vent : Press and release to vent the sunroof. Press and release to close the vent.

A deflector automatically raises when the sunroof is opened and retracts while the sunroof closes.

If the sunshade is closed, it opens automatically when the sunroof opens past the vented position.

Caution

Forcing the sunshade forward of the sliding glass panel may cause damage and the sunroof may not operate properly. Always close the glass panel before closing the sunshade.

The sunshade can be opened manually, but must be closed manually.

The sunroof glass panel cannot be opened or closed if the vehicle has an electrical failure.

The sunroof has an automatic reversal system. See *Sunroof* ⇨ *44*.

Convertible

The convertible top can be automatically opened and closed. For step-by-step instructions, see *Convertible Top* ⇨ *45*.

Performance and Maintenance

Traction Control/ Electronic Stability Control

The Traction Control System (TCS) limits wheel spin. The system turns on automatically every time the vehicle is started.

StabiliTrak assists with directional control of the vehicle in difficult driving conditions. The system turns on automatically every time the vehicle is started.

- To turn off TCS, press and release on the console behind the gear lever. illuminates.
- Press again to turn TCS back on.
- To turn off both TCS and StabiliTrak, press and hold on the console behind the gear lever until and illuminate.

- Press OFF again to turn on both systems.

See *Traction Control/Electronic Stability Control* ⇨ *182*.

Tyre Pressure Monitor

This vehicle may have a Tyre Pressure Monitor System (TPMS).



The low tyre pressure warning light alerts to a significant loss in pressure of one of the vehicle's tyres. If the warning light comes on, stop as soon as possible and inflate the tyres to the recommended pressure shown on the Tyre and Loading Information label. See *Vehicle Load Limits* ⇨ *164*. The warning light will remain on until the tyre pressure is corrected.

The low tyre pressure warning light may come on in cool weather when the vehicle is first started, and then turn off as the vehicle is driven. This may be an early indicator that the tyre pressures are getting low and the tyres need to be inflated to the proper pressure.

The TPMS does not replace normal monthly tyre maintenance. Maintain the correct tyre pressures.

See *Tyre Pressure Monitor System* ⇨ *240*.

Fuel



Premium Recommended Fuel

Use unleaded petrol rated at 95 RON or higher in your vehicle. Unleaded petrol with an octane rating as low as 91 RON may be used, but it will reduce performance and fuel economy. See *Fuel* ⇨ *198*.

Engine Oil Life System

The engine oil life system calculates engine oil life based on vehicle use and displays CHANGE ENGINE OIL SOON message when it is time to change the engine oil and filter. The oil life system should be reset to 100% only following an oil change.

Resetting the Oil Life System

After you change the oil, the oil life system will need to be reset. See your dealer for service.

See *Engine Oil Life System* ⇨ *210*.

Car Wash Guidelines

Caution

Some automatic car washes can cause damage to the vehicle, wheels, ground effects and convertible top. Automatic car washes are not recommended, due to lack of clearance for the undercarriage and/or wide rear tyres and wheels. See "Washing the Vehicle" under *Exterior Care* ⇨ *263*.

Driving for Better Fuel Economy

Driving habits can affect fuel mileage. Here are some driving tips to get the best fuel economy possible.

- Avoid fast starts and accelerate smoothly.
- Brake gradually and avoid abrupt stops.
- Avoid idling the engine for long periods of time.
- When road and weather conditions are appropriate, use cruise control.
- Always follow posted speed limits or drive more slowly when conditions require.
- Keep vehicle tyres properly inflated.
- Combine several trips into a single trip.
- Replace the vehicle's tyres with the same TPC Spec number moulded into the tyre's sidewall near the size.
- Follow recommended scheduled maintenance.

Keys, Doors, and Windows

Keys and Locks
Keys 23
Remote Keyless Entry (RKE) System 24
Remote Keyless Entry (RKE) System Operation 24
Remote Vehicle Start 29
Door Locks 31
Power Door Locks 33
Delayed Locking 33
Automatic Door Locks 33
Lockout Protection 33

Doors
Boot 34

Vehicle Security
Vehicle Security 37
Vehicle Alarm System 37
Immobiliser 38
Immobiliser Operation 38

Exterior Mirrors
Convex Mirrors 39
Power Mirrors 40
Heated Mirrors 40
Automatic Dimming Mirror 40
Reverse Tilt Mirrors 40

Interior Mirrors
Interior Rearview Mirrors 41
Manual Rearview Mirror 41
Automatic Dimming Rear View Mirror 41

Windows
Windows 41
Power Windows 42
Sun Visors 44

Roof
Sunroof 44
Convertible Top 45

Keys and Locks

Keys

⚠ Warning

Leaving children in a vehicle with a Remote Keyless Entry (RKE) transmitter is dangerous and children or others could be seriously injured or killed. They could operate the power windows or other controls or make the vehicle move. The windows will function with the RKE transmitter in the vehicle, and children or others could be caught in the path of a closing window. Do not leave children in a vehicle with an RKE transmitter.





The key, inside the Remote Keyless Entry (RKE) transmitter, can be used for all locks.

To remove the key, press the button on the side of the transmitter near the bottom, and pull the key out. Never pull the key out without pressing the button.

With an active OnStar subscription, an OnStar Advisor may remotely unlock the vehicle. See *OnStar Overview* ⇨ *286*.

See your dealer if a new key is needed.

Remote Keyless Entry (RKE) System

See *Declaration of Conformity* ⇨ *284*.

If there is a decrease in the Remote Keyless Entry (RKE) operating range:

- Check the distance. The transmitter may be too far from the vehicle.
- Check the location. Other vehicles or objects may be blocking the signal.
- Check the transmitter's battery. See “Battery Replacement” later in this section.
- If the transmitter is still not working correctly, see your dealer or a qualified technician for service.

Remote Keyless Entry (RKE) System Operation

The Keyless Access system allows for vehicle entry when the transmitter is within range. See “Keyless Access Operation” later in this section.

The RKE transmitter may work up to 60 m (197 ft) away outside the vehicle.

Other conditions can affect the performance of the transmitter. See *Remote Keyless Entry (RKE) System* ⇨ *24*.



With Remote Start Shown

: Press to lock all doors.

The turn signal indicators may flash and/or the horn may sound on second press to indicate locking.

If the passenger door is open when is pressed, all doors lock.

If the driver door is open when is pressed, all doors lock and the driver door will immediately unlock, if enabled through vehicle personalisation.

Pressing may also arm the alarm system. See *Vehicle Alarm System* ⇨ *37*.

Pressing will also lock the fuel door.

: Press to unlock the driver door. Press unlock again within five seconds to unlock all doors. The RKE transmitter can be programmed to unlock all doors on the first button press. See *Vehicle Personalisation* ⇨ *131*.

The indicators may flash and/or the horn may sound to indicate unlocking. See *Vehicle Personalisation* ⇨ *131*.

Pressing will disarm the alarm system. See *Vehicle Alarm System* ⇨ *37*.

Pressing will also unlock the fuel door.

: If equipped, press and release and then immediately press and hold for at least four seconds to start the engine from outside the vehicle using the RKE transmitter. See *Remote Vehicle Start* ⇨ *29*.

: Press twice quickly to release the boot.

: If equipped, press and release , and then immediately press and hold continuously to open the convertible top all the way. The vehicle must be off to operate the convertible top with the RKE transmitter. The top will stop movement approximately one second after is released. To stop the top immediately, press either the , , or on the RKE transmitter. will only open the convertible top.

The convertible top can also be opened using a button in the overhead console. See *Convertible Top* ⇨ *45*.

: Press and release to initiate vehicle locater. The exterior lamps flash and the horn chirps three times.

Press and hold for at least three seconds to sound the panic alarm. The horn sounds and the

indicators flash until is pressed again or the ignition is placed in ON/RUN/START.

Convertible Top

- Do not try to start the vehicle while using the RKE transmitter to open the convertible top.

  Release on the RKE transmitter and ENGINE START/STOP. Wait a few seconds before starting the vehicle normally.
- The passive door unlock feature may not operate properly while using the RKE transmitter to open the convertible top.

  The convertible top can also be opened using a button in the overhead console. See *Convertible Top* ⇨ *45*.

Keyless Access Operation

The Keyless Access system lets you lock and unlock the doors and access the boot without removing the RKE transmitter from your pocket, purse, briefcase, etc. The RKE transmitter should be within 1 m (3 ft) of the door or boot being opened. If equipped, there will be buttons on the outside door handles.

Keyless Access can be programmed to unlock all doors on the first lock/unlock press from the driver door. See *Vehicle Personalisation* ⇨ *131*.

Keyless Unlocking/Locking from the Driver Door

When the doors are locked and the RKE transmitter is within 1 m (3 ft) of the driver door handle, pressing the lock/unlock button on the driver door handle will unlock the driver door. If the lock/unlock button is pressed again within five seconds, the passenger door will unlock. Pull the door handle to unlatch the door.

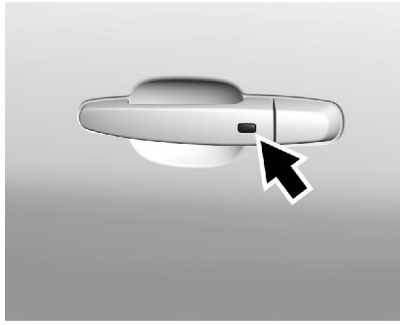

Driver Side Shown, Passenger Side Similar

Pressing the lock/unlock button will cause all doors to lock if any of the following occur:

- It has been more than five seconds since the first lock/unlock button press.
- Two lock/unlock button presses were used to unlock all doors.
- Any vehicle door has opened and all doors are now closed.

Keyless Unlocking/Locking from the Passenger Door

When the doors are locked and the RKE transmitter is within 1 m (3 ft) of the passenger door handle, pressing the lock/unlock button on the passenger door handle will unlock all doors.

Pressing the lock/unlock button will cause all doors to lock if any of the following occur:

- The lock/unlock button was used to unlock all doors.
- Any vehicle door has opened and all doors are now closed.

Passive Locking

With Keyless Access the vehicle will lock several seconds after all doors are closed if the vehicle is off and at least one transmitter has been removed or none remain in the vehicle.

If equipped with a locking fuel door, the fuel door will also lock at this time.

If other electronic devices interfere with the RKE transmitter signal, the vehicle may not detect the RKE transmitter inside the vehicle. If passive locking is enabled, the doors may lock with the RKE transmitter inside the vehicle. Do not leave the RKE transmitter in an unattended vehicle.

To customise the doors to automatically lock when exiting the vehicle, see “Remote Lock, Unlock, Start” under *Vehicle Personalisation ⇨ 131*.

Temporary Disable of the Passive Locking Feature

Temporarily disable passive locking by pressing and holding on the interior door switch with a door open for at least four seconds, or until three chimes are heard. Passive locking will then remain disabled until on the interior door is pressed, or until the vehicle is switched on.

Remote Left In Vehicle Alert

When the vehicle is turned off and a remote is left in the vehicle, the horn will chirp three times after all doors are closed. To turn on or off see *Vehicle Personalisation ⇨ 131*.

Remote No Longer In Vehicle Alert

If the vehicle is on, with a door open, and then all doors are closed, the vehicle will check for RKE transmitter(s) inside. If an RKE transmitter is not detected, the DIC will display NO REMOTE DETECTED and the horn will chirp three times.

This occurs only once each time the vehicle is driven.

See *Vehicle Personalisation ⇨ 131*.

Keyless Boot Opening

When the doors are locked, press the touch pad to open the boot if the RKE transmitter is within 1 m (3 ft).

Keyed Access

To access a vehicle with a weak transmitter battery, see *Door Locks ⇨ 31*.

Programming Transmitters to the Vehicle

Only RKE transmitters programmed to this vehicle will work. If a transmitter is lost or stolen, a replacement can be purchased and programmed through your dealer. When the replacement transmitter is programmed to this vehicle, all remaining transmitters must also be reprogrammed. Any lost or stolen transmitters will no longer work once the new transmitter is programmed.

Starting the Vehicle with a Low Transmitter Battery

If the transmitter battery is weak or if there is interference with the signal, the DIC may display NO REMOTE DETECTED or NO REMOTE KEY WAS DETECTED. PLACE KEY IN TRANSMITTER POCKET. THEN START YOUR VEHICLE.. See *Key and Lock Messages* ⇨ *125*.

To start the vehicle:

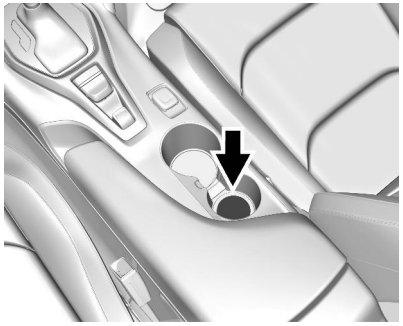

1. Place the transmitter in the rear cupholder in the centre console.
2. With the vehicle in P (Park) or N (Neutral), press the brake pedal and ENGINE START/STOP.

   Replace the transmitter battery as soon as possible.

Battery Replacement

Replace the battery if the REPLACE BATTERY IN REMOTE KEY message displays in the DIC. See *Key and Lock Messages* ⇨ *125*.

⚠ Warning

Make sure that you dispose of old batteries in accordance with environmental protection regulations to help protect the environment and your health.

Caution

When replacing the battery, do not touch any of the circuitry on the transmitter. Static from your body could damage the transmitter.

The battery is not rechargeable. To replace the battery:



1. Press the button on the side of the transmitter and pull the key out.

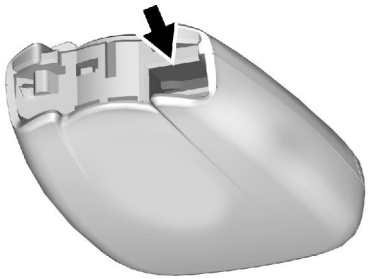

2. Separate the two halves of the transmitter using a flat tool inserted into the area near the key slot.



3. Remove the battery by pushing on the battery and sliding it toward the bottom of the transmitter.
4. Insert the new battery, positive side facing the back cover. Push the battery down until it is held in place. Replace with a CR2032 or equivalent battery.
5. Snap the battery cover back on to the transmitter.

Remote Vehicle Start

If equipped, this feature allows the engine to be started from outside the vehicle.

: This button will be on the RKE transmitter if equipped with remote start.

The climate control system will use the previous settings during a remote start. The rear window demister and heated seats, if equipped, may also come on. See “Remote Start Auto Heated Seats” under *Heated and Ventilated Front Seats* ⇨ *56* and *Vehicle Personalisation* ⇨ *131*.

Laws in some local communities may restrict the use of remote starters. For example, some laws may require a person using remote start to have the vehicle in view. Check local regulations for any requirements.

Other conditions can affect the performance of the transmitter. See *Remote Keyless Entry (RKE) System* ⇨ *24*.

Starting the Engine Using Remote Start

To start the engine using the remote start feature:

1. Press and release .
2. Immediately after completing Step 1, press and hold for at least four seconds or until the indicator lamps flash. The indicators flashing confirms the request to remote start the vehicle has been received.

   When the engine starts, the parking lamps will turn on and remain on as long as the engine is running. The vehicle's doors will be locked and the climate control system may come on.

   The engine will continue to run for 10 minutes. After 30 seconds, repeat the steps for a 10-minute time extension. Remote start can be extended only once.

Start the vehicle before driving.

If the vehicle is low on fuel, do not use the remote start feature. The vehicle may run out of fuel.

Extending Engine Run Time

The engine run time can also be extended by another 10 minutes, if during the first 10 minutes Steps 1and 2 are repeated while the engine is still running. An extension can be requested, 30 seconds after starting. This provides a total of 20 minutes.

The remote start can only be extended once.

When the remote start is extended, the second 10-minute period is added on to the first 10 minutes for a total of 20 minutes.

A maximum of two remote starts, or a remote start with an extension, are allowed between ignition cycles.

The vehicle's ignition must be changed to ON/RUN/START and then back to OFF before the remote start procedure can be used again.

Cancelling a Remote Start

To cancel a remote start, do one of the following:

- Press and hold until the parking lamps turn off.
- Turn on the hazard warning lights.
- Turn the vehicle on and then off.

Conditions in Which Remote Start Will Not Work

The remote start will not operate if:

- The RKE transmitter is in the vehicle.
- The bonnet is not closed.

- The hazard warning flashers are on.
- There is an emission control system malfunction.
- The engine coolant temperature is too high.
- The oil pressure is low.
- Two remote vehicle starts, or a single remote start with an extension, have already been used.
- The vehicle is not in P (Park).

Door Locks

⚠ Warning

Unlocked doors can be dangerous.

- Passengers, especially children, can easily open the doors and fall out of a moving vehicle. The chance of being thrown out of the vehicle in a crash is increased if the doors are

(Continued)

Warning (Continued)

not locked. So, all passengers should wear safety belts properly and the doors should be locked whenever the vehicle is driven.

- Young children who get into unlocked vehicles may be unable to get out. A child can be overcome by extreme heat and can suffer permanent injuries or even death from heat stroke. Always lock the vehicle whenever leaving it.
- Outsiders can easily enter through an unlocked door when slowing or stopping the vehicle. Lock the doors to help prevent this from happening.

To lock or unlock the doors from outside the vehicle:

- Press or on the Remote Keyless Entry (RKE) transmitter.
- Use the key in the driver door. The key cylinder is covered with a cap.

To lock or unlock the doors from inside the vehicle:

- Press or on the power door lock switch.
- Pulling an interior door handle will unlock the door. Pulling the door handle again unlatches it.

Keyless Access

If equipped, the RKE transmitter must be within 1 m (3 ft) of the door being opened. Press the button on the door handle to open. See "Keyless Access Operation" in *Remote Keyless Entry (RKE) System Operation* ⇨ *24*.

Key Cylinder Access

To access the key lock cylinder:

1. Pull the door handle to the open position.

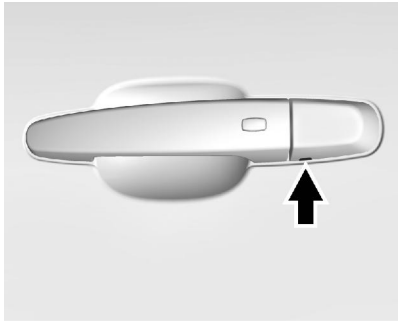

2. Insert the key into the slot on the bottom of the cap and pry outward.
3. Move the cap rearward and remove.

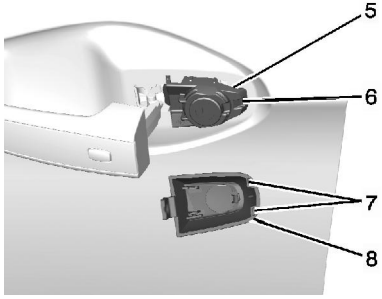

Replace the cap by snapping the two tabs (7) at the back of the cap (8) between the seal (5) and the metal base (6).

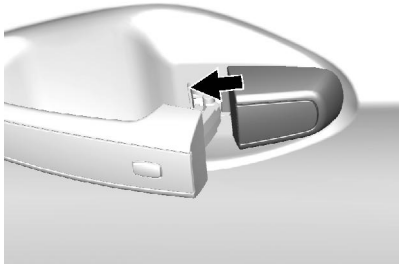

Move the cap forward and press to snap the cap in place.

Free-Turning Locks

The door lock cylinder turns freely when either the wrong key is used, or the correct key is not fully inserted. The free turning door lock feature prevents the lock from being forced open.

To reset the lock, turn it to the vertical position with the correct key fully inserted. Remove the key and insert it again.

If this does not reset the lock, turn the key halfway around in the cylinder and repeat the reset procedure.

Power Door Locks

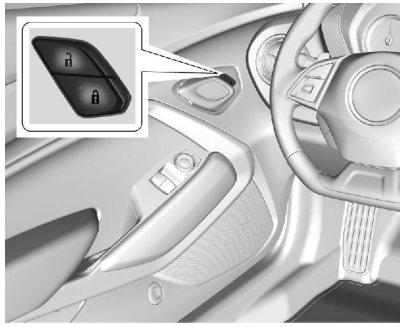

: Press to lock the doors.

: Press to unlock the doors.

Delayed Locking

This feature delays the locking of the doors until five seconds after all doors are closed.

Delayed locking can only be turned on when the Unlocked Door Anti Lockout feature has been turned off.

When is pressed on the power door lock switch while the door is open, a chime will sound three times indicating delayed locking is active.

The doors will lock automatically five seconds after all doors are closed. If a door is reopened before that time, the five-second timer will reset when all doors are closed again.

Press on the door lock switch again or press on the RKE transmitter to lock the doors immediately.

This feature can also be programmed. See *Vehicle Personalisation* ⇨ *131*.

Automatic Door Locks

When programmed, the doors will lock automatically when all doors are closed, the ignition is on, and the vehicle is shifted out of P (Park) for automatic transmissions, or the vehicle speed is above 13 km/h (8 mph) for manual gearboxes.

To unlock the doors:

- Press on the power door lock switch.
- If equipped with an automatic transmission, shift the transmission into P (Park).
- If equipped with a manual gearbox, turn the vehicle off when parked.

Automatic door locking can be programmed. See *Vehicle Personalisation* ⇨ *131*.

Lockout Protection

If the vehicle is in ACC/ ACCESSORY or ON/RUN/START and the power door lock switch is pressed with the driver door open, all the doors will lock and only the driver door will unlock.

If the vehicle is off and locking is requested while a door is open, when all doors are closed the vehicle will check for RKE transmitters inside. If an RKE transmitter is detected and the number of RKE transmitters inside

has not reduced, the driver door will unlock and the horn will chirp three times.

Lockout Protection can be manually overridden with the driver door open by pressing and holding on the power door lock switch.

Unlocked Door Anti-Lockout

If Unlocked Door Anti-Lockout is turned on and the vehicle is off, the driver door is open, and locking is requested, all the doors will lock and only the driver door will unlock. The Unlocked Door Anti-Lockout feature can be turned on or off using the vehicle personalisation menus. See *Vehicle Personalisation* ⇨ *131*.

Doors

Boot

⚠ Warning

Exhaust gases can enter the vehicle if it is driven with the tailgate, boot/hatch open, or with any objects that pass through the seal between the body and the boot/hatch or tailgate. Engine exhaust contains carbon monoxide (CO) which cannot be seen or smelled. It can cause unconsciousness and even death.

If the vehicle must be driven with the tailgate, or boot/hatch open:

- Close all of the windows.
- Fully open the air outlets on or under the instrument panel.
- Adjust the climate control system to a setting that brings in only outside air and set the fan speed to the

(Continued)

Warning (Continued)

highest setting. See "Climate Control Systems" in the Index.

- If the vehicle has a power tailgate, disable the power tailgate function.

For more information about carbon monoxide, see *Engine Exhaust* ⇨ *172*.

Boot Release

To open the trunk from outside of the vehicle

- Press x2 twice quickly on the Remote Keyless Entry (RKE) transmitter.
- Press the touch pad in the area above the license plate after unlocking all doors.
- For Keyless Access, press the touch pad in the area above the license plate when the transmitter is within 1 m (3 ft) of the rear of the vehicle.

For automatic transmissions, the vehicle must be in P (Park). For manual gearboxes, the vehicle must be off, or stationary with the handbrake set.

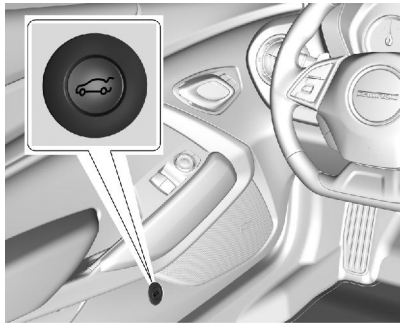

From inside the vehicle, press on the lower portion of the driver door.

Emergency Boot Release Handle

Caution
Do not use the emergency boot release handle as a tie-down or anchor point when securing items in the boot as it could damage the handle.



There is a glow-in-the-dark emergency boot release handle on the boot lid. This handle will glow following exposure to light. Pull the release handle to open the boot from the inside.

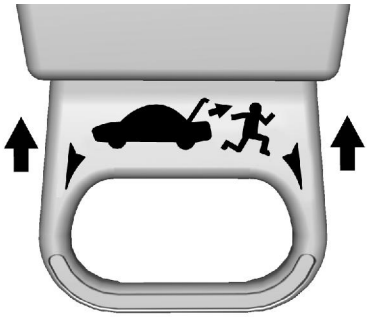

After pulling the emergency trunk release handle, push the handle back into the bezel.

Emergency Boot Release (Convertible Only)

If the boot lid cannot be opened using the RKE transmitter or the boot release button:



1. Locate the key extender in the glove box.

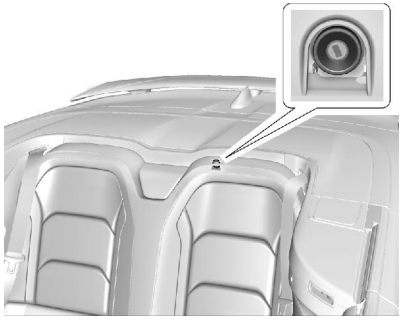

2. Locate the manual release beside the rear seat cushion on the driver side.
3. Push down on the upper rear seat cushion on the driver side until the manual release is visible.
4. Remove the key from the RKE transmitter.

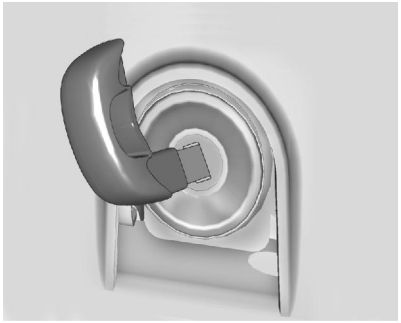

5. Remove any additional items attached to the key — such as keys, rings, or tags — then fully insert the key into the manual release.

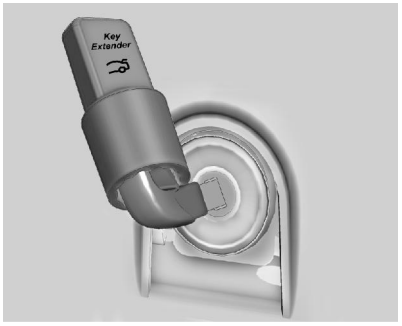

6. Place the key extender over the key head until the key extender stops.
7. Firmly turn the key clockwise to unlatch the boot lid.
8. Remove the key.
9. Store the key extender in the glove box.
10. Return the key to the RKE transmitter.

Vehicle Security

This vehicle has theft-deterrent features; however, they do not make the vehicle impossible to steal.

Vehicle Alarm System

This vehicle has an anti-theft alarm system.

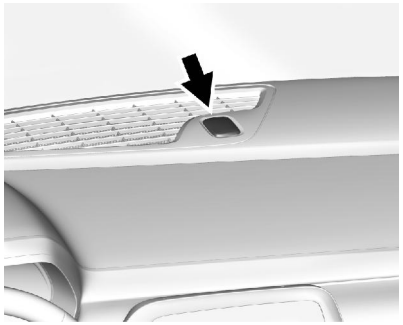

The security light, on the instrument panel near the windscreen, indicates the status of the system:

Off : Alarm system is disarmed.

On Solid : Vehicle is secured during the delay to arm the system.

Fast Flash : Vehicle is unsecured. A door, the bonnet, or the boot is open.

Slow Flash : Alarm system is armed.

Arming the Alarm System

1. Turn off the vehicle.
2. Lock the vehicle with one of the following:
   - Use the RKE transmitter.
   - With a door open, press the inside .
3. After 30 seconds the alarm system will arm, and the indicator light will begin to slowly flash indicating the alarm system is operating.
   Pressing on the RKE transmitter a second time will bypass the 30-second delay and immediately arm the alarm system.

The vehicle alarm system will not arm if the doors are locked with the key.

If the driver door is opened without first unlocking with the RKE transmitter, the horn will chirp and the lights will flash to indicate a pre-alarm. If the vehicle is not started, or the door is not unlocked by pressing on the RKE transmitter during the 10-second pre-alarm, the alarm will be activated.

The alarm will also be activated if the passenger door, the boot, or the bonnet is opened without first disarming the system. When the alarm is activated, the indicators flash and the horn sounds for about 30 seconds. The alarm system will then re-arm to monitor for the next unauthorised event.

Disarming the System

To disarm the system or turn off the alarm if it has been activated, do one of the following:

- Press on the RKE transmitter.
- Start the vehicle.

To avoid setting off the alarm by accident:

- Lock the vehicle with the RKE transmitter after all occupants have left the vehicle and all doors are closed.
- Always unlock the vehicle with the RKE transmitter. Unlocking the driver door with the key will not disarm the alarm.

How to Detect a Tamper Condition

If is pressed on the RKE transmitter and the horn chirps and the lights flash three times, a previous alarm occurred while the system was armed.

If the alarm has been activated, a message will appear on the DIC. See *Security Messages* ⇨ *127* for more information.

Immobiliser

See *Declaration of Conformity* ⇨ *284*.

Immobiliser Operation

This vehicle has a passive theft-deterrent system.

The system does not have to be manually armed or disarmed.

The vehicle is automatically immobilised when the transmitter leaves the vehicle.

The immobilisation system is disarmed when the ignition button is pressed and a valid transmitter is found in the vehicle.



The security light in the instrument cluster comes on when there is a problem with arming or disarming the theft-deterrent system.

The system has one or more transmitters matched to an immobiliser control unit in your vehicle. Only a correctly matched transmitter will start the vehicle.

If the transmitter is ever damaged, you may not be able to start your vehicle.

When trying to start the vehicle, the security light comes on briefly when the ignition is turned on.

If the engine does not start and the security light stays on, there is a problem with the system. Turn the vehicle off and try again.

If the RKE transmitter appears to be undamaged, try another transmitter. Or, you may try placing the transmitter in the rear cupholder in the centre console. See “Starting the Vehicle with a Low Transmitter Battery” under *Remote Keyless Entry (RKE) System Operation* ⇨ *24*.

If the engine does not start with the other transmitter or when the transmitter is in the pocket in the centre console, your vehicle needs service. See your dealer who can service the theft-deterrent system and have a new transmitter programmed to the vehicle.

Do not leave the transmitter or device that disarms or deactivates the theft-deterrent system in the vehicle.

Exterior Mirrors

Convex Mirrors

⚠ Warning

A convex mirror can make things, like other vehicles, look farther away than they really are. If you cut too sharply into the right lane, you could hit a vehicle on the right. Check the inside mirror or glance over your shoulder before changing lanes.

The driver and passenger side mirrors are convex shaped.
A convex mirror's surface is curved so more can be seen from the driver seat.

Power Mirrors

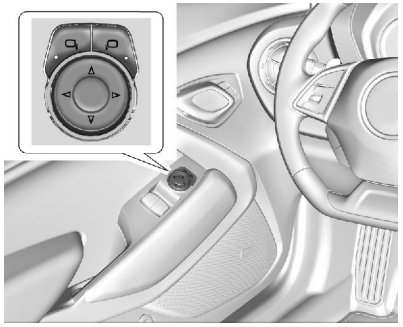

To adjust each mirror:

1. Press or to select the driver or passenger side mirror. The indicator light will illuminate.
2. Press the arrows on the control pad to move the mirror in the desired position.
3. Adjust each outside mirror so that a little of the vehicle and the area behind it can be seen.
4. Press or again to deselect the mirror.

Side Blind Zone Alert (SBZA)

The vehicle may have SBZA. See *Side Blind Zone Alert (SBZA)* ⇨ *195*.

Lane Change Alert (LCA)

The vehicle may have LCA. See *Lane Change Alert (LCA)* ⇨ *196*.

Heated Mirrors

If equipped with heated mirrors:

: The rear window demister also heats the outside mirrors.

See *Dual Automatic Climate Control System* ⇨ *149*.

Automatic Dimming Mirror

If the vehicle is equipped with an automatic dimming outside mirror on the driver side, the mirror will adjust for the glare of headlamps behind you.

Reverse Tilt Mirrors

If equipped with memory seats, the passenger and/or driver mirror tilts to a preselected position when the vehicle is in R (Reverse). This allows the kerb to be seen when parallel parking.

The mirror(s) return to the original position when:

- The vehicle is shifted out of R (Reverse), or remains in R (Reverse) for about 30 seconds.
- The ignition is turned off.
- The vehicle is driven in R (Reverse) above a set speed.

To turn this feature on or off, see *Vehicle Personalisation* ⇨ *131*.

Interior Mirrors

Interior Rearview Mirrors

Adjust the rearview mirror for a clear view of the area behind your vehicle.

If equipped with OnStar, the vehicle may have three control buttons at the bottom of the mirror. See your retailer for more information about OnStar and how to subscribe to it. See *OnStar Overview* ⇨ *286*.

To avoid accidental OnStar calls, clean the mirror with the ignition off.

Do not spray glass cleaner directly on the mirror. Use a soft towel dampened with water.

Manual Rearview Mirror

If equipped with a manual rearview mirror, push the tab forward for daytime use and pull it for night time use to avoid glare from the headlamps from behind.

Automatic Dimming Rear View Mirror

If equipped, automatic dimming reduces the glare of headlamps from behind. The dimming feature comes on when the vehicle is started.

Windows

⚠ Warning

Never leave a child, a helpless adult or a pet alone in a vehicle, especially with the windows closed in warm or hot weather. They can be overcome by the extreme heat and suffer permanent injuries or even death from heat stroke.



Power Windows

⚠ Warning

Leaving children in a vehicle with the Remote Keyless Entry (RKE) transmitter is dangerous for many reasons; children or others could be badly injured or even killed. They could operate the power windows or other controls or even make the vehicle move. The windows will function with the RKE transmitter in the vehicle and they could be seriously injured or killed if caught in the path of a closing window. Do not leave the RKE transmitter in a vehicle with children.

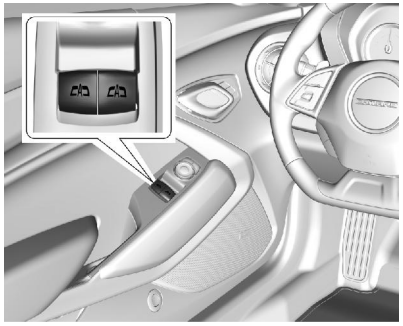

Coupe

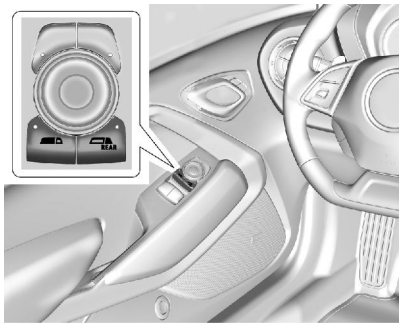

Convertible

The windows work when the vehicle is in ON/RUN, ACC/ACCESSORY, or when Retained Accessory Power (RAP) is active. See *Retained Accessory Power (RAP)* ⇨ *170*.

Press or pull the switch to open or close the window.

The windows will be temporarily disabled if the window switches are used repeatedly within a short time.

On convertible models, the window switches control both the front and rear windows. Press the front or rear button to choose the desired windows and the indicator light will illuminate, then use the window switches. The default operation is the front windows.

Window Express Movement

Express-down/up allows the windows to be opened or closed without holding the window switch. Press the window switch fully down or pull it up, and quickly release it to engage. Briefly press or pull the same switch to stop window movement.

Express Window Obstacle Detection

The express-up feature will reverse window movement if it comes in contact with an object. Extreme cold or ice could cause the window to auto-reverse. The window will operate as normal after the object or condition is removed.

Obstacle Detection Override

⚠ Warning

If obstacle detection override is activated, the window will not reverse automatically. You or others could be injured and the window could be damaged. Before you use obstacle detection override, make sure that all people and obstructions are clear of the window path.

The window can be closed by holding the window switch in the up position if conditions prevent it from express closing.

Programming the Power Windows

Programming may be necessary if the vehicle's battery has been disconnected or discharged. If the window is unable to express-up, follow these steps to program the window:

To program the window:

1. Close all doors.
2. Place the ignition in ON/RUN or ACC/ACCESSORY.
3. Partially open the window to be programmed, then close it and continue to pull the switch briefly after the window has fully closed.
4. Press the power window switch until the window is fully open and briefly hold.

Window Operation with Convertible Top

Windows automatically lower fully when the convertible top is lowered or raised. See *Convertible Top* ⇨ *45*.

Window Indexing

If the window freezes to the door, push the top of the window inward while opening the door. Clear all the snow and ice from the door and glass.

Then open the window completely and then close it.

The door can now be closed.

When fully closed, indexing automatically lowers the window a small amount when the door is opened. When the door is closed, the window will raise to its previous position. If either window does not index properly, it could be due to loss of power. Before seeing your dealer for service, program the power windows.

Sun Visors

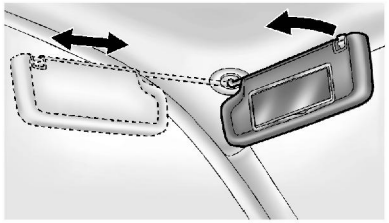

Pull the sun visor down to block glare. Detach the sun visor from the centre mount to pivot to the side window or, if equipped, extend along the rod.

Roof

Sunroof

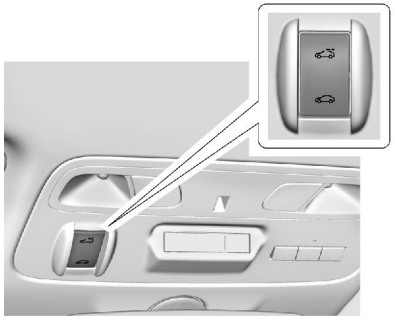

The sunroof only operates when the ignition is in ON/RUN or ACC/ ACCESSORY, or if Retained Accessory Power (RAP) is active. See *Retained Accessory Power (RAP)* ⇨ *170*.

If equipped, the sunroof switch is on the overhead console.

Open/Close (Manual Mode) : Press and hold to open the sunroof. Press and hold to close the sunroof. Release the switch to stop the movement.

Express-Open/Express-Close : Press to the second detent and release to express-open the sunroof. Press to the second detent and release to express-close the sunroof. Press the switch again to stop the movement.

Vent : Press and release to vent the sunroof. Press and release to close the vent.

A deflector automatically raises when the sunroof is opened and retracts while the sunroof closes.

If the sunshade is closed, it opens automatically when the sunroof opens past the vented position.

Caution

Forcing the sunshade forward of the sliding glass panel may cause damage and the sunroof may not operate properly. Always close the glass panel before closing the sunshade.

The sunshade can be opened manually, but must be closed manually.

The sunroof glass panel cannot be opened or closed if the vehicle has an electrical failure.

Automatic Reversal System

The sunroof/sunshade is equipped with an automatic reversal system that is only active when the sunroof/sunshade is being operated in express mode. If an object is in the path of the sunroof/sunshade while it is express closing, the reversal system will detect the object and stop. In the event of closing difficulties like frost or other conditions, it is possible to override the reversal system. To override the reversal system, close in manual mode. To stop the movement, release the switch.

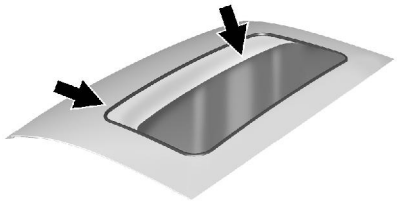

Dirt and debris may collect on the sunroof seal or in the track. This could cause an issue with sunroof operation or noise. It could also plug the water drainage system. Periodically open the sunroof and remove any obstacles or loose debris. Wipe the sunroof seal and roof sealing area using a clean cloth, mild soap, and water. Do not remove grease from the sunroof.

If water is seen dripping into the water drainage system, this is normal.

Convertible Top

If equipped with a convertible top, review the following before operating:

⚠ Warning

While opening or closing the convertible top, people can be injured by the moving parts of the tonneau cover or convertible top. Maintain visual contact with the top while it is being operated.

Caution

Follow these guidelines when operating the convertible top or damage can occur:

- Remove all items from the roof, boot lid, or tonneau cover before operating.

(Continued)

Caution (Continued)

- Remove all objects from the boot that may contact the convertible top when it is operated.
- Do not leave the vehicle with the convertible top open.
- Do not exceed 50 km/h (31 mph) until the top has completely closed or opened.
- Do not open or close the top while driving in high wind conditions.
- Do not operate the convertible top multiple times in a short period of time without starting the engine to avoid draining the vehicle battery.

(Continued)

Caution (Continued)

- Do not open or store the convertible top when it is dirty or wet. This could result in stains, mildew, or other damage.
- Only store the vehicle with the top fully closed.

Opening the Convertible Top

Using the Overhead Console Switch

1. Remove all objects from the top of the tonneau cover and forward of the partition. Place the partition in the rear storage area in the upright position. Fasten both sides of the partition to the posts just below the tonneau cover. See *Rear Storage* ⇨ *91*.
2. Close the boot.
3. Start the vehicle or place it in ACC/ACCESSORY.
4. When possible, operate the convertible top when the vehicle is stopped. The top can be operated while driving below 50 km/h (31 mph) and will stop if that speed is exceeded. The top operation will take approximately 25 seconds. Make sure the top operation can be completed before that speed is reached.



5. Press and hold the bottom of ⇦. The windows will automatically lower.

6. After the convertible top is completely open, a Driver Information Centre (DIC) message displays. Release the switch.

If the radio is on, the sound may be muted for a brief time due to a new audio system equalisation being loaded.

Using the RKE Transmitter

1. If equipped, press and release K, and then immediately press and hold M continuously to open the convertible top all the way. The vehicle must be off to operate the convertible top with the RKE transmitter.
2. The top will stop movement approximately one second after M is released. To stop the top immediately, press 7, K, or Q on the RKE transmitter. M will only open the convertible top.

   See *Remote Keyless Entry (RKE) System* ⇨ *24* and *Remote Keyless Entry (RKE) System Operation* ⇨ *24*.

Closing the Convertible Top

The RKE transmitter cannot be used to close the convertible top.

1. Make sure the sun visor mirror covers are closed and the sun visors are stored in the center mount position.
2. Remove all objects from the top of the tonneau cover and forward of the partition. Place the partition in the rear storage area in the upright position. Fasten both sides of the partition to the posts just below the tonneau cover. See *Rear Storage* ⇨ *91*.
3. Close the boot.
4. Start the vehicle or place it in ACC/ACCESSORY.
5. When possible, operate the convertible top when the vehicle is stopped. The top can be operated while driving below 50 km/h (31 mph) and will stop if that speed is exceeded. The top operation will take approximately 25 seconds. Make sure the top operation can be completed before that speed is reached.



6. Press and hold the top of . The windows will automatically lower.
7. After the convertible top is completely closed, a DIC message displays. Release the switch. Raise the windows if needed.

If the radio is on, the sound may be muted for a brief time due to a new audio system equalisation being loaded.

Troubleshooting

Check the following if the convertible top switch is not operating:

- The ignition should be in ACC/ ACCESSORY or ON/RUN, or Retained Accessory Power (RAP) should be active.
- The boot lid should be closed and the boot partition in place. A DIC message will display.
- If the ONLY MANUAL OPERATION OF TOP POSSIBLE message is displayed on the DIC, see "Manual Movement of Top" later in this section.
- At cooler outside temperatures, the convertible top may not open. It is possible to close the top down to temperatures of about −20 °C (−4 °F). A DIC message will display if the top will not open due to low temperature. If necessary, move the vehicle to a heated indoor area to operate the top.
- If the top has recently been cycled repeatedly or left in an intermediate state, it will be temporarily disabled. A DIC message displays. Normal operation will be restored within 10 minutes after the system has cooled.
- If the vehicle battery is low, the power top operation may be disabled. Try to start the vehicle. A DIC message displays.
- If the battery has recently been reconnected or if the vehicle has been jump started, the top may not operate until the power windows have been indexed. Complete the power window indexing procedure. See *Power Windows* ⇨ *42*.

See *Convertible Top Messages* ⇨ *122*.

Other features may be affected while operating the convertible top:

- The boot can only be opened with the key until the convertible top is completely opened or closed.
- The windows cannot close while the top is moving.
- When driving with the top not fully secured, chimes can be heard above 80 km/h (50 mph).

If the vehicle battery has been disconnected and reconnected, the fuses were pulled or replaced, or a jump start was performed, the TOP NOT SECURE message may display. Press and hold to open/close the top until this message is cleared.

See *Convertible Top Messages* ⇨ *122*.

Partial Top Cycling

If the convertible top operation is stopped before completion, the top will temporarily hold its position. If the ignition is in ACC/ ACCESSORY or ON/RUN, the top will be held for up to five minutes, then pulse down. If the vehicle is moving or off, the amount of time will vary from a few seconds to about a minute.

Beeps and DIC messages will be displayed before the top will move. When this occurs, immediately finish the convertible top operation by pressing again until it completes.

If the top cannot be secured, keep clear of the top components. In some conditions the top may move quickly.

Do not drive with the convertible top in an unsecured position. The top components may move unexpectedly. In some cases the top may not be able to be power operated. If this occurs, follow the DIC messages displayed.

If the tonneau cover is not secured and latched, and the vehicle is moving above 10 km/h (6 mph), the tonneau cover may automatically move to a stable position.

See *Convertible Top Messages* ⇨ *122*.

Manual Movement of Top

If the DIC displays the ONLY MANUAL OPERATION OF TOP POSSIBLE message:

1. Press to either open or close the top. Press the switch in the opposite direction if one does not work.
2. If the top moves, continue pressing the switch in that direction for at least five seconds. The top should then work normally.

If the top does not respond in either direction, take it to your retailer for service. If the top is retracted but not latched, use the following procedure to manually close the convertible top and tonneau cover if needed. This requires more than one person.

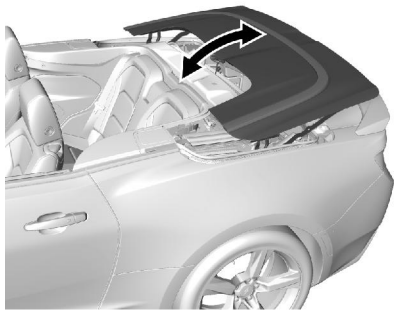

1. On each side of the tonneau cover, lift and pivot rearward into the fully open position. Hold the front and rear of the tonneau cover at the same time.

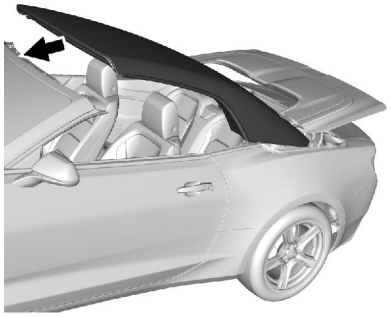

2. Lift and move the convertible top forward by pulling on both sides of the front bow into the fully closed position.

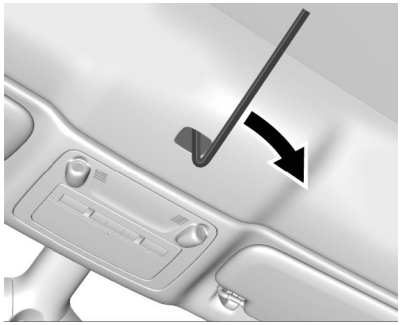

3. Lock the front of the convertible top to the frame by popping out the small cover, inserting a hex wrench, and turning clockwise until it stops.
4. Lift up the tension bow on both sides and raise the tonneau cover to approximately the half raised position, and then allow it to slide into the closed position.
5. Lower the tension bow.

The vehicle can now be driven to your retailer for service. The convertible top will not be completely waterproof and should not be driven over 80 km/h (50 mph) in this position.

Cleaning the Convertible Top

The convertible top should be cleaned often. Do not use high-pressure car washes as these may cause water to enter the vehicle.

Hand wash the convertible top in partial shade. Use mild soap, lukewarm water, and a soft sponge. A chamois or cloth may leave lint on the top and a brush can chafe the threads in the top fabric. Do not use detergents, harsh cleaners, solvents, or bleaching agents.

Wet the entire top and let the soap remain on the fabric for a few minutes. Wash evenly to avoid spots or rings. When the top is very dirty, use a mild foam-type cleaner. Thoroughly rinse the entire vehicle, then let the top dry in direct sunlight.

To protect the convertible top:

- Make sure the convertible top is completely dry before lowering it.
- Do not get any cleaner on the vehicle's painted finish; it could leave streaks.

Seats and Restraints

Head Restraints
Head Restraints 52

Front Seats
Electrically Operated Seat Adjustment 52
Reclining Seat Backrests 53
Memory Seats 54
Seat-Back Latches 55
Heated and Ventilated Front Seats 56

Rear Seats
Rear Seats 57

Seat Belts
Seat Belts 58
How to Wear Safety Belts Properly 59
Three-Point Belt 60
Seat-Belt Use During Pregnancy 62
Safety System Check 62
Seat Belt Care 62
Replacing Safety Belt System Parts after a Crash 63

Airbag System
Air-Bag System 63
Where Are the Airbags? 65
When Should an Airbag Inflate? 67
What Makes an Airbag Inflate? 68
How Does an Airbag Restrain? 68
What Will You See after an Airbag Inflates? 68
Passenger Sensing System ... 70
Servicing the Airbag-Equipped Vehicle 74
Adding Equipment to the Airbag-Equipped Vehicle 74
Airbag System Check 75
Replacing Airbag System Parts after a Crash 75

Child Restraints
Older Children 76
Infants and Young Children 77
Child Restraint Systems 80
Where to Put the Restraint 81
ISOFIX Child Restraint Systems 86
Securing Child Restraints (With the Seat Belt in the Rear Seat) 86
Securing Child Restraints (With the Seat Belt in the Front Seat) 88

Head Restraints

The vehicle's front seats have adjustable head restraints in the outboard seating positions.

⚠ Warning

With head restraints that are not installed and adjusted properly, there is a greater chance that occupants will suffer a neck/spinal injury in a crash. Do not drive until the head restraints for all occupants are installed and adjusted properly.



Adjust the head restraint so that the top of the restraint is at the same height as the top of the occupant's head. This position reduces the chance of a neck injury in a crash.

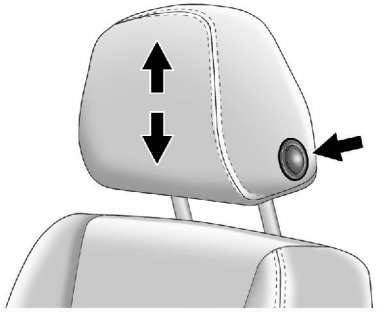

To raise or lower the head restraint, press the button located on the side of the head restraint, and pull up or push the head restraint down, and release the button. Pull and push on the head restraint after the button is released to make sure that it is locked in place.

The front outboard head restraints are not removable.

Front Seats

Electrically Operated Seat Adjustment

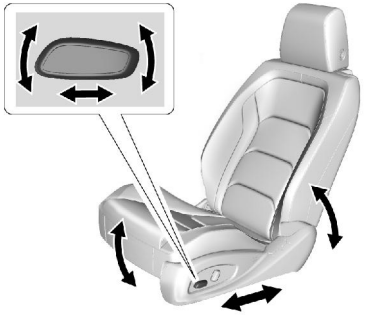

To adjust a power seat:

- Move the seat forward or rearward by sliding the horizontal control forward or rearward.
- Raise or lower the front part of the seat cushion by moving the front of the horizontal control up or down.

- Raise or lower the entire seat by moving the entire horizontal control up or down.

Reclining Seat Backrests

⚠ Warning

Sitting in a reclined position when the vehicle is in motion can be dangerous. Even when buckled up, the safety belts cannot do their job.

The shoulder belt will not be against your body. Instead, it will be in front of you. In a crash, you could go into it, receiving neck or other injuries.

The lap belt could go up over your abdomen. The belt forces would be there, not at your pelvic bones. This could cause serious internal injuries.

(Continued)

Warning (Continued)

For proper protection when the vehicle is in motion, have the seatback upright. Then sit well back in the seat and wear the safety belt properly.



Do not have a backrest reclined if the vehicle is moving.

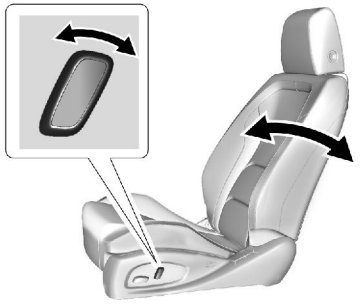

To adjust the seatback:

- Tilt the top of the control rearward to recline.
- Tilt the top of the control forward to raise.

Memory Seats

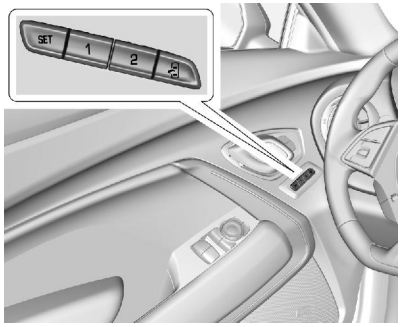

If equipped, the 1, 2, SET, and (Exit) buttons on the driver door are used to manually store and recall memory settings for the driver seat and outside mirrors.

Storing Memory Positions

To store positions to the 1 and 2 buttons:

1. Place the ignition in ON/RUN/ START or ACC/ACCESSORY.
2. Adjust the driver seat and the outside mirrors on some vehicles to the desired driving position.
3. Press and release SET. A beep will sound.
4. Immediately press and hold 1 until two beeps sound.
5. Repeat Steps 1–4 for a second driver using 2.

To store positions to the (Exit) button and easy exit features, repeat Steps 1–4 using to store your position for getting out of the vehicle.

Manually Recalling Memory Positions

Press and hold 1, 2, or to manually recall the previously stored memory positions. Releasing 1, 2, or before the stored positions are reached stops the recall.

Automatically Recalling Memory Positions (Auto Memory Recall)

If programmed on in vehicle personalisation, the Auto (Automatic) Memory Recall feature automatically recalls the current driver's previously stored 1 or 2 position when the ignition is changed from OFF to ON/RUN/ START or ACC/ACCESSORY.

See “Auto Memory Recall” under “Comfort and Convenience” in *Vehicle Personalisation* ⇨ *131*.

To stop recall movement, press one of the memory, power mirror, or power seat controls.

RKE transmitters are not labelled with a number. If your memory seat position is stored to 1 or 2, but this position is not automatically recalling, then store your positions to the other button or switch RKE transmitters with the other driver.

If the vehicle's driver has changed, in some vehicles the Driver ID may be displayed for the first few ignition cycles.

Easy Exit Recall

Easy exit recall automatically activates when one of the following occurs:

- The vehicle is turned off and the driver's door is opened within a short time.
- The vehicle is turned off with the driver's door open.

To stop recall movement, press one of the memory, driver seat, or outside mirror controls.

Obstructions

If something has blocked the driver seat while recalling a memory position, the recall may stop. Remove the obstruction. Then do one of the following:

- If automatically or manually recalling the stored memory position, press and hold the appropriate manual control for two seconds. Try recalling again by pressing the appropriate memory button.
- If automatically recalling the position, press and hold the appropriate manual control for the memory item that is not recalling for two seconds. Try recalling again by opening the driver door and pressing on the RKE transmitter.
- If recalling the exit position, press and hold the appropriate manual control for the exit feature not recalling for two seconds. Then try recalling the exit position again.

If the memory position is still not recalling, see your dealer for service.

Seat-Back Latches



To access the rear seats, pull up on the latch on the top of the driver or front passenger backrest. Fold the backrest forward.

⚠ Warning

If either seatback is not locked, it could move forward in a sudden stop or crash. That could cause injury to the person sitting there. Always push and pull on the seatbacks to be sure they are locked.

To return the seatback to the upright position, lift the seatback and manually push it rearward until it locks in place. Push and pull on the backrest to make sure it is locked.

Do not use the power recline control on the outboard side of the seat to raise the seatback. See *Reclining Seat Backrests* ⇨ *53*.

Heated and Ventilated Front Seats

⚠ Warning

If you cannot feel temperature change or pain to the skin, the seat heater may cause burns. To reduce the risk of burns, people with such a condition should use care when using the seat heater, especially for long periods of time. Do not place anything on the seat that insulates against heat, such as a blanket, cushion, cover, or similar item. This may cause the seat heater to

(Continued)

Warning (Continued)

overheat. An overheated seat heater may cause a burn or may damage the seat.

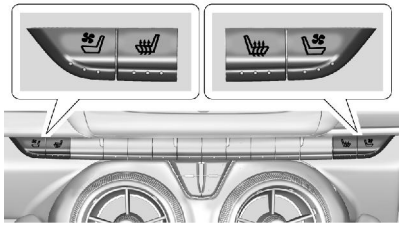

If available, the engine must be running to operate.

Press or to turn on the heated seat. A light indicates this feature is on.

Press the button once for the highest setting. With each press of the button, the heated seat will change to the next lower setting, and then the off setting. Three lights indicate the highest setting, and one light indicates the lowest.

The passenger seat may take longer to heat up.

Press or to turn on the ventilated seat. A light indicates this feature is on.

Press the button once for the highest setting. With each press of the button, the ventilated seat will change to the next lower setting, and then the off setting. Three lights indicate the highest setting, and one light indicates the lowest.

Remote Start Auto Heated Seats

When it is cold outside, the heated seats can be turned on automatically during a remote start. They are cancelled when the ignition is turned on. Press the button to use the heated seats after the vehicle is started.

The heated seat indicator lights do not turn on during a remote start.

The temperature performance of an unoccupied seat may be reduced. This is normal.

The heated seats will not turn on during a remote start unless they are enabled in the vehicle personalisation menu. See *Remote Vehicle Start* ⇨ *29* and *Vehicle Personalisation* ⇨ *131*.

Rear Seats

If equipped, the coupé seat can be folded for more cargo space. The rear seat has two designated seating positions. Fold the seat only when the vehicle is parked.

To fold the seat backrest down:

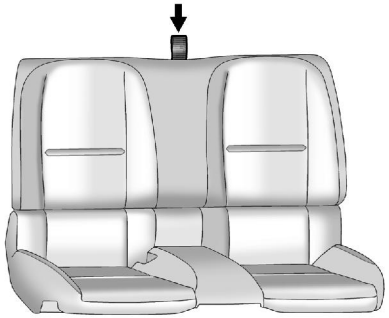

1. Pull on the strap on the top of the rear seatback.
2. Fold the backrest down.

⚠ Warning

A safety belt that is improperly routed, not properly attached, or twisted will not provide the protection needed in a crash. The person wearing the belt could be seriously injured. After raising the rear seatback, always check to be sure that the safety belts are properly routed and attached, and are not twisted.

Lift the seatback up to raise it, and push it back to lock it into place. Make sure the safety belt is not twisted or caught in the seatback.

Seat Belts

This section of the manual describes how to use safety belts properly. It also describes some things not to do with safety belts.

⚠ Warning

Do not let anyone ride where a safety belt cannot be worn properly. In a crash, if you or your passenger(s) are not wearing safety belts, injuries can be much worse than if you are wearing safety belts. You can be seriously injured or killed by hitting things inside the vehicle harder or by being ejected from the vehicle. In addition, anyone who is not buckled up can strike other passengers in the vehicle.

It is extremely dangerous to travel in a cargo area, inside or outside of a vehicle. In a collision, passengers riding in these areas are more likely to be seriously injured or killed. Do not allow

(Continued)

Warning (Continued)

passengers to ride in any area of the vehicle that is not equipped with seats and safety belts.

Always wear a safety belt, and check that all passenger(s) are restrained properly too.

This vehicle has indicators as a reminder to buckle the safety belts. See *Safety Belt Reminders* ⇨ *107*.

Why Safety Belts Work

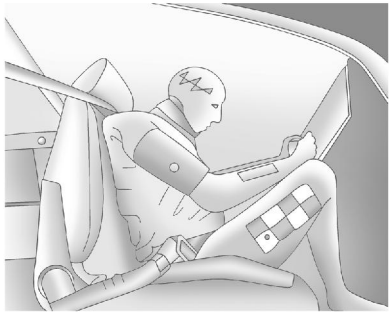

When riding in a vehicle, you travel as fast as the vehicle does. If the vehicle stops suddenly, you keep going until something stops you. It could be the windscreen, the instrument panel, or the safety belts!

When you wear a safety belt, you and the vehicle slow down together. There is more time to stop because you stop over a longer distance and, when worn properly, your strongest bones take the forces from the safety belts. That is why wearing safety belts makes such good sense.

Questions and Answers About Safety Belts

Q: Will I be trapped in the vehicle after a crash if I am wearing a safety belt?

A: You *could* be - whether you are wearing a safety belt or not. Your chances of being conscious during and after a crash, so you *can* unbuckle and get out, are *much* greater if you are belted.

Q: If my vehicle has airbags, why should I have to wear safety belts?

A: Airbags are supplemental systems only; so they work *with* safety belts - not instead of them. Whether or not an airbag is provided, all occupants still have to buckle up to get the most protection.

Also, in nearly all regions, the law requires wearing safety belts.

How to Wear Safety Belts Properly

This section is only for people of adult size.

There are special things to know about seat belts and children, and there are different rules for smaller children and infants. If a child will be riding in the vehicle, see *Older Children* ⇨ *76* or *Infants and Young Children* ⇨ *77*. Follow those rules for everyone's protection.

It is very important for all occupants to buckle up. Statistics show that unbelted people are hurt more often in crashes than those who are wearing safety belts.

There are important things to know about wearing a safety belt properly.

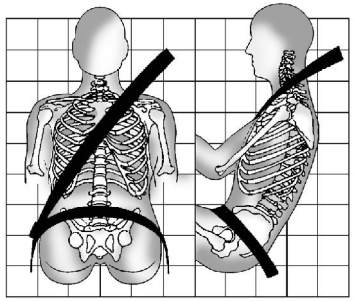

- Sit up straight and always keep your feet on the floor in front of you.
- Always use the correct buckle for your seating position.
- Wear the lap part of the belt low and snug on the hips, just touching the thighs. In a crash, this applies force to the strong pelvic bones and you would be less likely to slide under the lap belt. If you slid under it, the belt would apply force on your abdomen. This could cause serious or even fatal injuries.
- Wear the shoulder belt over the shoulder and across the chest. These parts of the body are best able to take belt restraining forces. The shoulder belt locks if there is a sudden stop or crash.

⚠ Warning

You can be seriously injured, or even killed, by not wearing your safety belt properly.

- Never allow the lap or shoulder belt to become loose or twisted.
- Never wear the shoulder belt under both arms or behind your back.
- Never route the lap or shoulder belt over an armrest.

Three-Point Belt

All seating positions in the vehicle have a lap-shoulder belt.

The following instructions explain how to wear a lap-shoulder belt properly.

1. Adjust the seat, if the seat is adjustable, so you can sit up straight. To see how, see "Seats" in the Index.

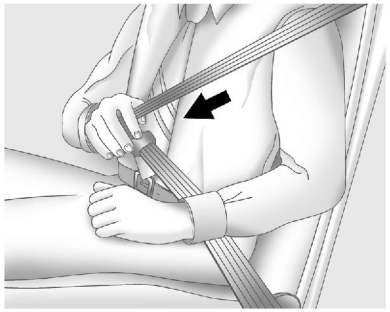

2. Pick up the latch plate and pull the belt across you. Do not let it get twisted.

The lap-shoulder belt may lock if you pull the belt across you very quickly. If this happens, let the belt go back slightly to unlock it. Then pull the belt across you more slowly.

If the shoulder portion of a passenger belt is pulled out all the way, the child restraint locking feature may be engaged. If this happens, let the belt go back all the way and start again.

Engaging the child restraint locking feature in the front outboard seating position may affect the passenger sensing system. See *Passenger Sensing System* ⇨ *70*.

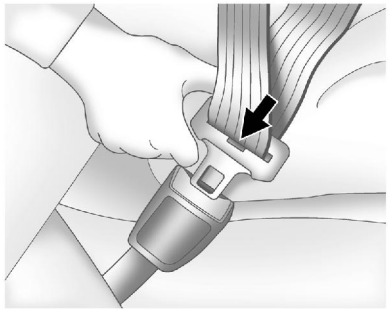

3. Push the latch plate into the buckle until it clicks.

   Pull up on the latch plate to make sure it is secure.

   Position the release button on the buckle so that the safety belt could be quickly unbuckled if necessary.

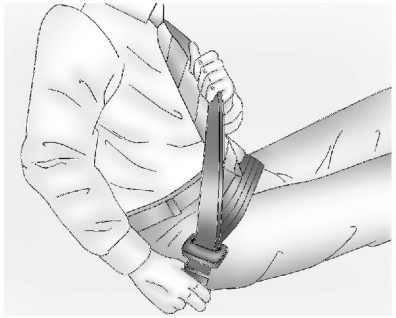

4. To make the lap part tight, pull up on the shoulder belt.

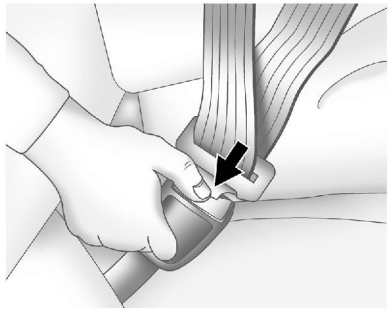

To unlatch the belt, push the button on the buckle. The belt should return to its stowed position.

Always stow the seat belt slowly. If the seat belt webbing returns quickly to the stowed position, the retractor may lock and cannot be pulled out. If this happens, pull the seat belt straight out firmly to unlock the webbing, and then release it. If the webbing is still locked in the retractor, see your retailer.

Before a door is closed, be sure the safety belt is out of the way. If a door is slammed against a safety belt, damage can occur to both the safety belt and the vehicle.

Safety Belt Pretensioners

This vehicle has safety belt pretensioners for the front outboard occupants. Although the safety belt pretensioners cannot be seen, they are part of the safety belt assembly. They can help tighten the safety belts during the early stages of a moderate to severe frontal, near-frontal, or rear crash if the threshold conditions for pretensioner activation are met. Safety belt pretensioners can also help tighten the safety belts in a side crash or rollover event.

Pretensioners work only once. If the pretensioners activate in a crash, the pretensioners and probably other parts of the vehicle's safety belt system will need to be replaced. See *Replacing Safety Belt System Parts after a Crash* ⇨ *63*.

Rear Safety Belt Comfort Guides

Rear safety belt comfort guides may provide added safety belt comfort for older children who have outgrown booster seats and for some adults. When installed on a shoulder belt, the comfort guide positions the belt away from the neck and head.

Comfort guides may be available through your retailer for the rear outboard seating positions. If available, instructions are included with the guide.

Seat-Belt Use During Pregnancy

Safety belts work for everyone, including pregnant women. Like all occupants, they are more likely to be seriously injured if they do not wear safety belts.

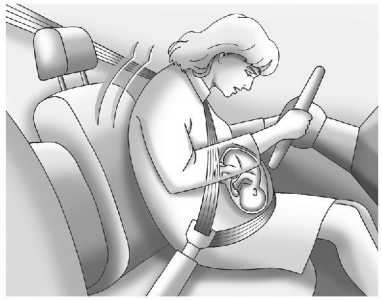

A pregnant woman should wear a lap-shoulder belt, and the lap portion should be worn as low as possible, below the rounding, throughout the pregnancy.

The best way to protect the foetus is to protect the mother. When a safety belt is worn properly, it is more likely that the foetus will not be hurt in a crash. For pregnant women, as for anyone, the key to making safety belts effective is wearing them properly.

Safety System Check

Check that the seat belt reminder, seat belts, buckles, latch plates, and retractors, are all working properly. Look for any other loose or damaged seat belt system parts that might keep a seat belt system from performing properly. See your dealer to have it repaired. Torn or frayed safety belts may not protect you in a crash. They can rip apart under impact forces. If a belt is torn or frayed, have it replaced immediately.

Make sure the safety belt reminder light is working. See *Safety Belt Reminders* ⇨ *107*.

Keep safety belts clean and dry. See *Seat Belt Care* ⇨ *62*.

Seat Belt Care

Keep belts clean and dry.

⚠ Warning

Do not bleach or dye seat belt webbing. It may severely weaken the webbing. In a crash, they might not be able to provide adequate protection. Clean and rinse seat belt webbing only with mild soap and lukewarm water. Allow the webbing to dry.

Safety belts should be properly cared for and maintained.

Safety belt hardware should be kept dry and free of dust or debris. Exterior hard surfaces and safety belt webbing may be lightly cleaned with mild soap and water as necessary. Ensure there is not excessive dust or debris in the mechanism. If dust or debris exists in the system please see the dealer. Parts may need to be replaced to ensure proper functionality of the system.

Replacing Safety Belt System Parts after a Crash

⚠ Warning

A crash can damage the safety belt system in the vehicle. A damaged safety belt system may not properly protect the person using it, resulting in serious injury or even death in a crash. To help make sure the safety belt systems are working properly after a crash, have them inspected and any necessary replacements made as soon as possible.

After a minor crash, replacement of safety belts may not be necessary. But the safety belt assemblies that were used during any crash may have been stressed or damaged. See your dealer to have the safety belt assemblies inspected or replaced.

New parts and repairs may be necessary even if the safety belt system was not being used at the time of the crash.

Have the safety belt pretensioners checked if the vehicle has been in a crash, or if the airbag readiness light stays on after you start the vehicle or while you are driving. See *Airbag Readiness Light* ⇨ *107*.

⚠ Warning

Safety procedures must be followed at all times when disposing of the vehicle or vehicle parts. Disposal should be performed only by an authorised service centre, to help protect the environment and your health.

Airbag System

Air-Bag System

The vehicle has the following airbags:

- A frontal airbag for the driver.
- A frontal airbag for the front outboard passenger.
- A knee airbag for the driver.
- A knee airbag for the front outboard passenger.
- A seat-mounted side impact airbag for the driver.
- A seat-mounted side impact airbag for the front outboard passenger.

The vehicle may have the following airbags:

- A roof-rail airbag for the driver and the passenger seated directly behind the driver.
- A roof-rail airbag for the front outboard passenger and the passenger seated directly behind the front outboard passenger.

All vehicle airbags have the word AIRBAG on the trim or on a label near the deployment opening.

For frontal airbags, the word AIRBAG is on the centre of the steering wheel for the driver and on the instrument panel for the front outboard passenger.

For knee airbags, the word AIRBAG is on the lower part of the instrument panel.

For seat-mounted side impact airbags, the word AIRBAG is on the side of the seat closest to the door.

For roof-rail airbags, the word AIRBAG is on the ceiling or trim.

Airbags are designed to supplement the protection provided by safety belts. Even though today's airbags are also designed to help reduce the risk of injury from the force of an inflating bag, all airbags must inflate very quickly to do their job.

Here are the most important things to know about the airbag system:

⚠ Warning

You can be severely injured or killed in a crash if you are not wearing your safety belt, even with airbags. Airbags are designed to work with safety belts, not replace them. Also, airbags are not designed to inflate in every crash. In some crashes safety belts are the only restraint. See *When Should an Airbag Inflate?* ⇨ *67*.

Wearing your safety belt during a crash helps reduce your chance of hitting things inside the vehicle or being ejected from it. Airbags are “supplemental restraints” to the safety belts. Everyone in the vehicle should wear a safety belt properly, whether or not there is an airbag for that person.

⚠ Warning

Because airbags inflate with great force and faster than the blink of an eye, anyone who is up against, or very close to any airbag when it inflates can be seriously injured or killed. Do not sit unnecessarily close to any airbag, as you would be if sitting on the edge of the seat or leaning forward. Safety belts help keep you in position before and during a crash. Always wear a safety belt, even with airbags. The driver should sit as far back as possible while still maintaining control of the vehicle. The seat belts and the front outboard passenger airbags are most effective when you are sitting well back and upright in the seat with both feet on the floor.

Occupants should not lean on or sleep against the door or side windows in seating positions with seat-mounted side impact airbags and/or roof-rail airbags.

⚠ Warning

Children who are up against, or very close to, any airbag when it inflates can be seriously injured or killed. Always secure children properly in the vehicle. To read how, see *Older Children* ⇨ *76* or *Infants and Young Children* ⇨ *77*.



There is an airbag readiness light on the instrument cluster, which shows the airbag symbol. The system checks the airbag electrical system for malfunctions. The light tells you if there is an electrical problem. See *Airbag Readiness Light* ⇨ *107*.

Where Are the Airbags?



The driver frontal airbag is in the centre of the steering wheel.

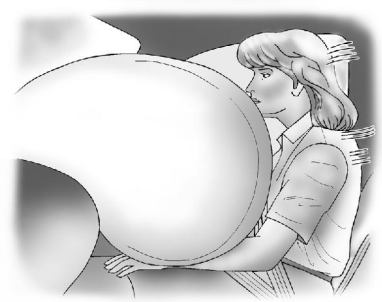

The front outboard passenger frontal airbag is in the passenger side instrument panel.

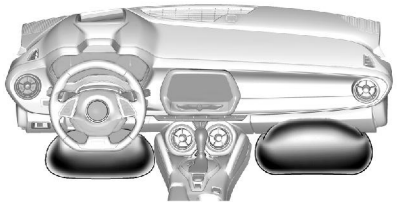

The driver knee airbag is below the steering column. The front outboard passenger knee airbag is below the glove box.



Coupe Models, Driver Side Shown, Passenger Side Similar

On coupe models, the driver and front outboard passenger seat-mounted side impact airbags are in the sides of the backrests closest to the door.



Convertible Models, Driver Side Shown, Passenger Side Similar

On convertible models, the driver and front outboard passenger seat-mounted side impact airbags are in the sides of the backrests closest to the door.



Coupe Models, Driver Side Shown, Passenger Side Similar

On coupe models, the roof-rail airbags for the driver, front outboard passenger, and second row outboard passengers are in the ceiling above the side windows.

⚠ Warning

If something is between an occupant and an airbag, the airbag might not inflate properly or it might force the object into that person causing severe injury or even death. The path of an

(Continued)

Warning (Continued)

inflating airbag must be kept clear. Do not put anything between an occupant and an airbag, and do not attach or put anything on the steering wheel hub or on or near any other airbag covering.

Do not use seat accessories that block the inflation path of a seat-mounted side impact airbag.

Never secure anything to the roof of a vehicle with roof-rail airbags by routing a rope or tie-down through any door or window opening. If you do, the path of an inflating roof-rail airbag will be blocked.

When Should an Airbag Inflate?

This vehicle is equipped with airbags. See *Air-Bag System* ⇨ *63*. Airbags are designed to inflate if the impact exceeds the specific airbag system's deployment threshold. Deployment thresholds are used to predict how severe a crash is likely to be in time for the airbags to inflate and help restrain the occupants. The vehicle has electronic sensors that help the airbag system determine the severity of the impact. Deployment thresholds can vary with specific vehicle design.

Frontal airbags are designed to inflate in moderate to severe frontal or near frontal crashes to help reduce the potential for severe injuries, mainly to the driver's or front outboard passenger's head and chest.

Whether the frontal airbags will or should inflate is not based primarily on how fast the vehicle is travelling. It depends on what is hit, the direction of the impact, and how quickly the vehicle slows down.

Frontal airbags may inflate at different crash speeds depending on whether the vehicle hits an object straight on or at an angle, and whether the object is fixed or moving, rigid or deformable, narrow or wide.

Frontal airbags are not intended to inflate during vehicle rollovers, rear impacts, or in many side impacts.

In addition, the vehicle has advanced technology frontal airbags. Advanced technology frontal airbags adjust the restraint according to crash severity.

Knee airbags are designed to inflate in moderate to severe frontal or near frontal impacts. Knee airbags are not designed to inflate during vehicle rollovers, in rear impacts, or in many side impacts.

The vehicle also has a seat position sensor that enables the sensing system to monitor the position of the front outboard passenger seat. The passenger seat position sensor and the passenger safety belt buckle provide information that is used to determine if the passenger knee airbag should inflate.

Seat-mounted side impact airbags are designed to inflate in moderate to severe side crashes depending on the location of the impact. Seat-mounted side impact airbags are not designed to inflate in frontal impacts, near frontal impacts, rollovers, or rear impacts.
A seat-mounted side impact airbag is designed to inflate on the side of the vehicle that is struck.

Roof-rail airbags, if equipped, are designed to inflate in moderate to severe side crashes depending on the location of the impact. In addition, these roof-rail airbags are designed to inflate during a rollover or in a severe frontal impact. Roof-rail airbags are not designed to inflate in rear impacts. Both roof-rail airbags will inflate when either side of the vehicle is struck, if the sensing system predicts that the vehicle is about to roll over on its side, or in a severe frontal impact.

In any particular crash, no one can say whether an airbag should have inflated simply because of the vehicle damage or repair costs.

What Makes an Airbag Inflate?

In a deployment event, the sensing system sends an electrical signal triggering a release of gas from the inflator. Gas from the inflator fills the airbag causing the bag to break out of the cover. The inflator, the airbag, and related hardware are all part of the airbag module.

For airbag locations, see *Where Are the Airbags?* ⇨ *65*.

How Does an Airbag Restrain?

In moderate to severe frontal or near frontal collisions, even belted occupants can contact the steering wheel or the instrument panel. In moderate to severe side collisions, even belted occupants can contact the inside of the vehicle.

Airbags supplement the protection provided by safety belts by distributing the force of the impact more evenly over the occupant's body.

Rollover capable roof-rail airbags, if equipped, are designed to help contain the head and chest of occupants in the outboard seating positions in the first and second rows. The rollover capable roof-rail airbags are designed to help reduce the risk of full or partial ejection in rollover events, although no system can prevent all such ejections.

But airbags would not help in many types of collisions, primarily because the occupant's motion is not toward those airbags. See *When Should an Airbag Inflate?* ⇨ *67*.

Airbags should never be regarded as anything more than a supplement to safety belts.

What Will You See after an Airbag Inflates?

After the frontal and seat-mounted side impact airbags inflate, they quickly deflate, so quickly that some people may not even realize an airbag inflated. Roof-rail airbags may still be at least partially inflated for some time after deployment. Some components of the airbag

module may be hot for several minutes. For location of the airbags, see *Where Are the Airbags?* ⇨ *65*.

The parts of the airbag that come into contact with you may be warm, but not too hot to touch. There may be some smoke and dust coming from the vents in the deflated airbags. Airbag inflation does not prevent the driver from seeing out of the windscreen or being able to steer the vehicle, nor does it prevent people from leaving the vehicle.

⚠ Warning

When an airbag inflates, there may be dust in the air. This dust could cause breathing problems for people with a history of asthma or other breathing trouble. To avoid this, everyone should leave the vehicle as soon as it is safe to do so. If you have breathing problems but cannot get out of the vehicle after an airbag inflates, then get fresh air by opening a window or a door.

(Continued)

Warning (Continued)

If you experience breathing problems following an airbag deployment, you should seek medical attention.

The vehicle has a feature that may automatically unlock the doors, turn on the interior lamps and hazard warning lights, and shut off the fuel system after the airbags inflate. The feature may also activate, without airbag inflation, after an event that exceeds a predetermined threshold. You can lock the doors, turn off the interior lights and turn off the hazard warning flashers by using the controls for those features.

⚠ Warning

A crash severe enough to inflate the airbags may have also damaged important functions in the vehicle, such as the fuel system, brake and steering

(Continued)

Warning (Continued)

systems, etc. Even if the vehicle appears to be drivable after a moderate crash, there may be concealed damage that could make it difficult to safely operate the vehicle.

Use caution if you should attempt to restart the engine after a crash has occurred.

In many crashes severe enough to inflate the airbag, windscreens are broken by vehicle deformation. Additional windscreen breakage may also occur from the front outboard passenger airbag.

- Airbags are designed to inflate only once. After an airbag inflates, you will need some new parts for the airbag system. If you do not get them, the airbag system will not be there to help protect you in another crash. A new system will include airbag modules and possibly

other parts. The service manual for the vehicle covers the need to replace other parts.

- The vehicle has a crash sensing and diagnostic module which records information after a crash. See *Vehicle Data Recording and Privacy* ⇨ *285*.
- Let only qualified technicians work on the airbag systems. Improper service can mean that an airbag system will not work properly. See your dealer for service.

Passenger Sensing System

The vehicle has a passenger sensing system for the front outboard passenger position. The passenger airbag status indicator will light on the overhead console when the vehicle is started.



The symbol for on and off will be visible during the system check. When the system check is complete, either the symbol for on or off will be visible. See *Passenger Airbag Status Indicator* ⇨ *108*.

The passenger sensing system turns off the front outboard passenger frontal airbag and knee airbag under certain conditions. No other airbag is affected by the passenger sensing system.

The passenger sensing system works with sensors that are part of the front outboard passenger seat and safety belt. The sensors are designed to detect the presence of a properly seated occupant and determine if the front outboard passenger frontal airbag and knee airbag should be allowed to inflate or not.

According to accident statistics, children are safer when properly secured in a rear seat in the correct child restraint for their weight and size.

Whenever possible, children aged 12 and under should be secured in a rear seating position.

Never put a rear-facing child seat in the front. This is because the risk to the rear-facing child is so great, if the airbag inflates.

⚠ Warning

A child in a rear-facing child restraint can be seriously injured or killed if the passenger frontal airbag inflates. This is because the back of the rear-facing child restraint would be very close to the inflating airbag. A child in a forward-facing child restraint can be seriously injured or killed if the passenger frontal airbag inflates and the passenger seat is in a forward position.

(Continued)

Warning (Continued)

Even if the passenger sensing system has turned off the front outboard passenger airbag(s), no system is fail-safe. No one can guarantee that an airbag will not deploy under some unusual circumstance, even though the airbag(s) are off.

Never put a rear-facing child restraint in the front seat, even if the airbag is off. If securing a forward-facing child restraint in the front outboard passenger seat, always move the seat as far back as it will go. It is better to secure child restraints in the rear seat. Consider using another vehicle to transport the child when a rear seat is not available.

The passenger sensing system is designed to turn off the front outboard passenger frontal airbag and knee airbag if:

- The front outboard passenger seat is unoccupied.
- The system determines that an infant is present in a child restraint.
- A front outboard passenger takes his/her weight off of the seat for a period of time.
- There is a critical problem with the airbag system or the passenger sensing system.

When the passenger sensing system has turned off the front outboard passenger frontal airbag and knee airbag, the off indicator will light and stay lit as a reminder that the airbags are off. See *Passenger Airbag Status Indicator* ⇨ *108*.

The passenger sensing system is designed to turn on the front outboard passenger frontal airbag and knee airbag anytime the system senses that a person of adult size is sitting properly in the front outboard passenger seat. When the passenger sensing system has allowed the airbags to be enabled, the on indicator will light and stay lit as a reminder that the airbags are active.

For some children, including children in child restraints, and for very small adults, the passenger sensing system may or may not turn off the front outboard passenger frontal airbag and knee airbag, depending upon the person's seating posture and body build. Everyone in the vehicle who has outgrown child restraints should wear a safety belt properly — whether or not there is an airbag for that person.

⚠ Warning

If the airbag readiness light ever comes on and stays on, it means that something may be wrong with the airbag system. To help avoid injury to yourself or others, have the vehicle serviced right away. See *Airbag Readiness Light* ⇨ *107* for more information, including important safety information.

If the On Indicator Is Lit for a Child Restraint

The passenger sensing system is designed to turn off the front outboard passenger frontal airbag and knee airbag if the system determines that an infant is present in a child restraint. If a child restraint has been installed and the on indicator is lit:

1. Turn the vehicle off.
2. Remove the child restraint from the vehicle.
3. Remove any additional items from the seat such as blankets, cushions, seat covers, seat heaters, or seat massagers.
4. Reinstall the child restraint following the directions provided by the child restraint manufacturer and refer to *Securing Child Restraints (With the Seat Belt in the Front Seat)* ⇨ *88* or *Securing Child Restraints (With the Seat Belt in the Rear Seat)* ⇨ *86*.

   Make sure the seat belt retractor is locked by pulling the shoulder belt all the way out of the retractor when installing the child restraint, even if the child restraint is equipped with a seat belt lock-off. When the retractor lock is set, the belt can be tightened but not pulled out of the retractor.
5. If, after reinstalling the child restraint and restarting the vehicle, the on indicator is still lit, turn the vehicle off. Then slightly recline the vehicle seatback and adjust the seat cushion, if adjustable, to make sure that the vehicle seatback is not pushing the child restraint into the seat cushion.

   Also make sure the child restraint is not trapped under the vehicle head restraint. If this happens, adjust the head restraint. See *Head Restraints* ⇨ *52*.
6. Restart the vehicle.

The passenger sensing system may or may not turn off the airbags for a child in a child restraint depending upon the child's size. It is better to secure the child restraint in a rear seat. Never put a rear-facing child restraint in the front seat, even if the on indicator is not lit.

If the Off Indicator Is Lit for an Adult-Sized Occupant

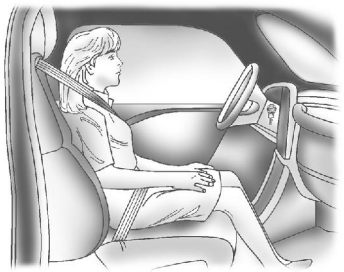

If a person of adult size is sitting in the front outboard passenger seat, but the off indicator is lit, it could be because that person is not sitting properly in the seat or that the child restraint locking feature is engaged.

Use the following steps to allow the system to detect that person and enable the front outboard passenger frontal airbag and knee airbag:

1. Turn the vehicle off.
2. Remove any additional material from the seat, such as blankets, cushions, seat covers, seat heaters, or seat massagers.
3. Place the seatback in the fully upright position.
4. Have the person sit upright in the seat, centred on the seat cushion, with legs comfortably extended.
5. If the shoulder portion of the belt is pulled out all the way, the child restraint locking feature will be engaged. This may unintentionally cause the passenger sensing system to turn the airbag off for some adult-sized occupants. If this happens, unbuckle the belt, let the belt go back all the way, and then buckle the belt again without pulling the belt out all the way.
6. Restart the vehicle and have the person remain in this position for two to three minutes after the on indicator is lit.

⚠ Warning

If the front outboard passenger airbag is turned off for an adult-sized occupant, the airbag will not be able to inflate and help protect that person in a crash, resulting in an increased risk of serious injury or even death. An adult-sized occupant should not ride in the front outboard passenger seat, if the passenger airbag off indicator is lit.

Additional Factors Affecting System Operation

Safety belts help keep the passenger in position on the seat during vehicle manoeuvres and braking, which helps the passenger sensing system maintain the passenger airbag status. See “Safety Belts” and “Child Restraints” in the Index for additional information about the importance of proper restraint use.

A thick layer of additional material, such as a blanket or cushion, or aftermarket equipment such as seat covers, seat heaters, and seat massagers can affect how well the passenger sensing system operates. We recommend that you not use seat covers or other aftermarket equipment except when approved by GM for your specific vehicle. See *Adding Equipment to the Airbag-Equipped Vehicle* ⇨ *74* for more information about modifications that can affect how the system operates.

The on indicator may be lit if an object, such as a briefcase, handbag, grocery bag, laptop, or other electronic device, is put on an unoccupied seat. If this is not desired, remove the object from the seat.

⚠ Warning

Stowing of articles under the passenger seat or between the passenger seat cushion and seatback may interfere with the proper operation of the passenger sensing system.

Servicing the Airbag-Equipped Vehicle

Airbags affect how the vehicle should be serviced. There are parts of the airbag system in several places around the vehicle. Your dealer and the service manual have information about servicing the vehicle and the airbag system.

⚠ Warning

For up to 10 seconds after the vehicle is turned off and the battery is disconnected, an airbag can still inflate during improper service. You can be injured if you

(Continued)

Warning (Continued)

are close to an airbag when it inflates. Avoid yellow connectors. They are probably part of the airbag system. Be sure to follow proper service procedures, and make sure the person performing work for you is qualified to do so.

Adding Equipment to the Airbag-Equipped Vehicle

Adding accessories that change the vehicle's frame, bumper system, height, front end, or side sheet metal, may keep the airbag system from working properly. The operation of the airbag system can also be affected by changing any parts of the front seats, seat belts, airbag sensing and diagnostic module, steering wheel, instrument panel, any of the airbag modules, ceiling or pillar garnish trim, overhead console, front sensors, side impact sensors, or airbag wiring.

Your dealer and the service manual have information about the location of the airbag sensors, sensing and diagnostic module, and airbag wiring.

In addition, the vehicle has a passenger sensing system for the front outboard passenger position, which includes sensors that are part of the passenger seat. The passenger sensing system may not operate properly if the original seat trim is replaced with non-GM covers, upholstery, or trim; or with GM covers, upholstery, or trim designed for a different vehicle. Any object, such as an aftermarket seat heater or a comfort-enhancing pad or device, installed under or on top of the seat fabric, could also interfere with the operation of the passenger sensing system. This could either prevent proper deployment of the passenger airbag(s) or prevent the passenger sensing system from properly turning off the passenger airbag(s). See *Passenger Sensing System* ⇨ *70*.

If the vehicle has rollover roof-rail airbags, see *Different Size Tyres and Wheels* ⇨ *248* for additional important information.

If you have to modify your vehicle because you have a disability and you have questions about whether the modifications will affect the vehicle's airbag system, or if you have questions about whether the airbag system will be affected if the vehicle is modified for any other reason, see your dealer.

Airbag System Check

The airbag system does not need regularly scheduled maintenance or replacement. Make sure the airbag readiness light is working. See *Airbag Readiness Light* ⇨ *107*.

Caution

If an airbag covering is damaged, opened, or broken, the airbag may not work properly. Do not open or break the airbag coverings. If there are any

(Continued)

Caution (Continued)

opened or broken airbag coverings, have the airbag covering and/or airbag module replaced. For the location of the airbags, see *Where Are the Airbags?* ⇨ *65*. See your dealer for service.

Replacing Airbag System Parts after a Crash

⚠ Warning

A crash can damage the airbag systems in the vehicle.
A damaged airbag system may not properly protect you and your passenger(s) in a crash, resulting in serious injury or even death. To help make sure the airbag systems are working properly after a crash, have them inspected and any necessary replacements made as soon as possible.

If an airbag inflates, you will need to replace airbag system parts. See your dealer for service.

If the airbag readiness light stays on after the vehicle is started or comes on when you are driving, the airbag system may not work properly. Have the vehicle serviced right away. See *Airbag Readiness Light* ⇨ *107*.

⚠ Warning

Safety procedures must be followed at all times when disposing of the vehicle or vehicle parts. Disposal should be performed only by an authorised service centre, to help protect the environment and your health.

Child Restraints

Older Children

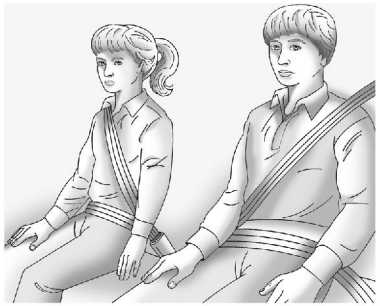

Older children who have outgrown booster seats should wear the vehicle's safety belts.

The manufacturer instructions that come with the booster seat state the weight and height limitations for that booster. Use a booster seat with a lap-shoulder belt until the child passes the fit test below:

- Sit all the way back on the seat. Do the knees bend at the seat edge? If yes, continue. If no, return to the booster seat.
- Fasten the lap-shoulder belt. Does the shoulder belt rest on the shoulder? If yes, continue. If no, try using the rear safety belt comfort guide, if available. See “Rear Safety Belt Comfort Guides” under *Three-Point Belt* ⇨ *60*. If a comfort guide is not available, or if the shoulder belt still does not rest on the shoulder, then return to the booster seat.
- Does the lap belt fit low and snug on the hips, touching the thighs? If yes, continue. If no, return to the booster seat.
- Can proper safety belt fit be maintained for the length of the trip? If yes, continue. If no, return to the booster seat.

Q: What is the proper way to wear safety belts?

A: An older child should wear a lap-shoulder belt and get the additional restraint a shoulder belt can provide. The shoulder belt should not cross the face or neck. The lap belt should fit snugly below the hips, just touching the top of the thighs. This applies belt force to the child's pelvic bones in a crash. It should never be worn over the abdomen, which could cause severe or even fatal internal injuries in a crash.

Also see “Rear Safety Belt Comfort Guides” under *Three-Point Belt* ⇨ *60*.

According to accident statistics, children are safer when properly restrained in a rear seating position.

In a crash, children who are not buckled up can strike other people who are buckled up, or can be thrown out of the vehicle. Older children need to use safety belts properly.

⚠ Warning

Never allow more than one child to wear the same safety belt. The safety belt cannot properly spread the impact forces. In a crash, they can be crushed together and seriously injured. A seat belt must be used by only one person at a time.

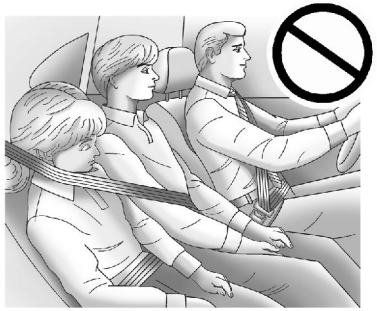

⚠ Warning

Never allow a child to wear the seat belt with the shoulder belt behind their back. A child can be seriously injured by not wearing the lap-shoulder belt properly. In a crash, the child would not be restrained by the shoulder belt. The child could move too far forward increasing the chance of head and neck injury. The child might also slide under the lap belt. The belt force would then be applied right on the abdomen.

(Continued)

Warning (Continued)

That could cause serious or fatal injuries. The shoulder belt should go over the shoulder and across the chest.



Infants and Young Children

Everyone in a vehicle needs protection! This includes infants and all other children. Neither the distance travelled nor the age and

size of the traveller changes the need, for everyone, to use safety restraints.

⚠ Warning

Children can be seriously injured or strangled if a shoulder belt is wrapped around their neck. The shoulder belt can tighten but cannot be loosened if it is locked. The shoulder belt locks when it is pulled all the way out of the retractor. It unlocks when the shoulder belt is allowed to go all the way back into the retractor, but it cannot do this if it is wrapped around a child's neck. If the shoulder belt is locked and tightened around a child's neck, the only way to loosen the belt is to cut it.

Never leave children unattended in a vehicle and never allow children to play with the safety belts.

Every time infants and young children ride in vehicles, they should have the protection provided by appropriate child restraints. Neither the vehicle's safety belt system nor its airbag system is designed for them.

Children who are not restrained properly can strike other people, or can be thrown out of the vehicle.

⚠ Warning

Never hold an infant or a child while riding in a vehicle. Due to crash forces, an infant or a child will become so heavy it is not possible to hold it during a crash. For example, in a crash at only 40 km/h (25 mph), a 5.5 kg (12 lb) infant will suddenly become a 110 kg (240 lb) force on a person's arms. An infant or child should be secured in an appropriate restraint.



⚠ Warning

Children who are up against, or very close to, any airbag when it inflates can be seriously injured or killed. Never put a rear-facing child restraint in the front outboard seat. Secure a rear-facing child restraint in a rear seat. It is also better to secure a forward-facing child restraint in a rear seat. If you must secure a forward-facing child restraint in the front outboard seat, always move the front passenger seat as far back as it will go.



Child restraints are devices used to restrain, seat, or position children in the vehicle and are sometimes called child seats or car seats.

There are three basic types of child restraints:

- Forward-facing child restraints
- Rearward-facing child restraints
- Belt-positioning booster seats

The proper child restraint for your child depends on their size, weight, and age, and also on whether the child restraint is compatible with the vehicle in which it will be used.

For each type of child restraint, there are many different models available. When purchasing a child restraint, be sure it is designed to be used in a motor vehicle. The restraint manufacturer's instructions that come with the restraint state the weight and height limitations for a particular child restraint. In addition, there are many kinds of restraints available for children with special needs.

⚠ Warning

To reduce the risk of neck and head injury in a crash, infants and toddlers should be secured in a rear-facing child restraint until age two, or until they reach the maximum height and weight limits of their child restraint.

⚠ Warning

A young child's hip bones are still so small that the vehicle's regular seat-belt may not remain low on the hip bones, as it should. Instead, it may settle around the child's abdomen. In a crash, the belt would apply force on a body area that is unprotected by any bony structure. This alone could cause serious or fatal injuries. To reduce the risk of serious or fatal injuries during a crash, young children should always be secured in appropriate child restraints.

Child Restraint Systems

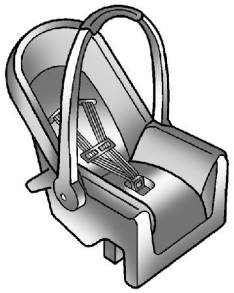

Rear-Facing Infant Seat

A rear-facing child restraint provides restraint with the seating surface against the back of the infant.

The harness system holds the infant in place and, in a crash, acts to keep the infant positioned in the restraint.



Forward-Facing Child Seat

A forward-facing child restraint provides restraint for the child's body with the harness.

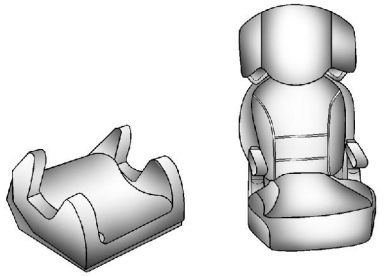

Booster Seats

A belt-positioning booster seat is used for children who have outgrown their forward-facing child restraint. Boosters are designed to improve the fit of the vehicle's seat belt system until the child is large enough for the vehicle seat belts to fit properly without a booster seat. See the seat belt fit test in *Older Children* ⇨ *76*.

Securing an Add-On Child Restraint in the Vehicle

⚠ Warning

A child can be seriously injured or killed in a crash if the child restraint is not properly secured in the vehicle. Secure the child restraint properly in the vehicle using the vehicle safety belt or ISOFIX system, following the instructions that came with that child restraint and the instructions in this manual.

To help reduce the chance of injury, the child restraint must be secured in the vehicle. Child restraint systems must be secured in vehicle seats by lap belts or the lap belt portion of a lap-shoulder belt, or by the ISOFIX system. See *ISOFIX Child Restraint Systems* ⇨ *86* for more information. Children can be endangered in a crash if the child restraint is not properly secured in the vehicle.

When securing an add-on child restraint, refer to the instructions that come with the restraint which may be on the restraint itself or in a booklet, or both, and to this manual. The child restraint instructions are important, so if they are not available, obtain a replacement copy from the manufacturer.

Keep in mind that an unsecured child restraint can move around in a collision or sudden stop and injure people in the vehicle. Be sure to properly secure any child restraint in the vehicle - even when no child is in it.

Securing the Child Within the Child Restraint

⚠ Warning

A child can be seriously injured or killed in a crash if it is not properly secured in the child restraint. Secure the child properly following the instructions that came with that child restraint.

Where to Put the Restraint

According to accident statistics, children and infants are safer when properly restrained in a child restraint system or infant restraint system secured in a rear seating position.

Whenever possible, children aged 12 and under should be secured in a rear seating position.

⚠ Warning

NEVER use a rearward-facing child restraint on a seat protected by an ACTIVE AIRBAG in front of it; DEATH or SERIOUS INJURY to the CHILD can occur.

⚠ Danger

When using a child restraint system on the front passenger seat, the airbag systems for the

(Continued)

Danger (Continued)

front passenger seat must be deactivated; if not, the triggering of the airbags poses a risk of fatal injury to the child.

This is especially the case if rear-facing child restraint systems are used on the front passenger seat.



DO NOT place rear-facing child seat on this seat. DEATH OR SERIOUS INJURY can occur. This is because the risk to the rear-facing child is so great, if the airbag deploys.

When securing a child restraint in a rear seating position, study the instructions that came with the child restraint to make sure it is compatible with this vehicle.

Child restraints and booster seats vary considerably in size, and some may fit in certain seating positions better than others.

Depending on where you place the child restraint and the size of the child restraint, you may not be able to access adjacent safety belt assemblies or ISOFIX anchors for additional passengers or child restraints. Adjacent seating positions should not be used if the child restraint prevents access to or interferes with the routing of the safety belt.

Wherever a child restraint is installed, be sure to secure the child restraint properly.

Keep in mind that an unsecured child restraint can move around in a collision or sudden stop and injure people in the vehicle. Be sure to properly secure any child restraint in the vehicle - even when no child is in it, or remove it from the vehicle.

ISOFIX Child Restraint Systems Installation Suitability - Coupe

Mass Group	Class Size	Fixture	Vehicle ISOFIX Positions		
			Front Passenger	Rear Left Passenger	Rear Right Passenger
Infant Carbed (Carrycot)	F	ISO/L1	X	X	X
	G	ISO/L2	X	X	X
0 (up to 10 kg)	E	ISO/R1	X	IUF[1]	IUF[1]
0+ (up to 13 kg)	E	ISO/R1	X	IUF[1]	IUF[1]
	D	ISO/R2	X	X	X
	C	ISO/R3	X	X	X
I (9 to 18 kg)	D	ISO/R2	X	X	X
	C	ISO/R3	X	X	X
	B	ISO/F2	X	IUF[1]	IUF[1]
	B1	ISO/F2X	X	IUF[1]	IUF[1]
	A	ISO/F3	X	X	X
IUF: Suitable for ISOFIX forward child restraint systems of universal category approved for use in the mass group.					
IL: Suitable for particular ISOFIX child restraint systems (CRS) given in the attached list. These ISOFIX CRS are those of the specific vehicle, restricted or semi-universal categories.					
X: ISOFIX position not suitable for ISOFIX child restraint systems in this mass group and/or size class.					
[1]: With front seat adjustment.					

ISOFIX Child Restraint Systems Installation Suitability - Convertible

Mass Group	Class Size	Fixture	Vehicle ISOFIX Positions		
			Front Passenger	Rear Left Passenger	Rear Right Passenger
Infant Carbed (Carrycot)	F	ISO/L1	X	X	X
	G	ISO/L2	X	X	X
0 (up to 10 kg)	E	ISO/R1	X	IUF[1]	IUF[1]
0+ (up to 13 kg)	E	ISO/R1	X	IUF[1]	IUF[1]
	D	ISO/R2	X	X	X
	C	ISO/R3	X	X	X
I (9 to 18 kg)	D	ISO/R2	X	X	X
	C	ISO/R3	X	X	X
	B	ISO/F2	X	IUF	IUF
	B1	ISO/F2X	X	IUF	IUF
	A	ISO/F3	X	IUF	IUF
IUF: Suitable for ISOFIX child restraint systems of universal category approved for use in the mass group.					
IL: Suitable for particular ISOFIX child restraint systems (CRS) given in the attached list. These ISOFIX CRS are those of the specific vehicle, restricted or semi-universal categories.					
X: ISOFIX position not suitable for ISOFIX child restraint systems in this mass group and/or size class.					
[1]: With front seat adjustment.					

Child Restraint Systems Installation Suitability - Coupe and Convertible

Mass Group	Seating Positions		
	Front Passenger	Rear Right Outboard	Rear Left Outboard
Group 0 Up to 10 kg	X	U	U
Group 0 + Up to 13 kg	X	U	U
Group I 9 to 18 kg	X	U	U
Group II 15 to 25 kg	X	U	U
Group III 22 to 36 kg	X	U	U
U: Suitable for universal category restraints approved for use in this mass group.			
X: Seat position not suitable for children in this mass group.			

ISOFIX Child Restraint Systems

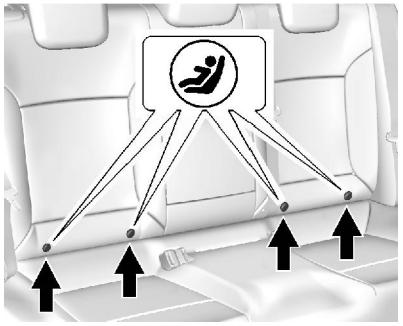

ISOFIX mounting brackets are marked by on the seat back.

Fasten vehicle-approved ISOFIX child restraint systems to the ISOFIX mounting brackets.

Specific vehicle ISOFIX child restraint positions are marked in the "ISOFIX Child Restraint Systems Installation Suitability" table. See *Where to Put the Restraint* ⇨ *81*.

No more than two ISOFIX child restraint systems can be installed on the rear seats at the same time, though not right next to each other.

Top Tether Fastening Eyes

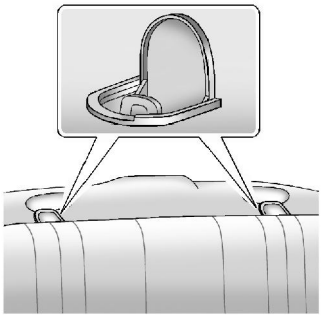

Coupe

Convertible top models do not have top tether anchors to be used to secure a child restraint in any seating position.

Top tether fastening eyes in the coupe are marked with for a child seat.

In addition to the ISOFIX mounting, fasten the top tether strap to the top-tether fastening eyes.

ISOFIX child restraint systems of universal category positions are marked in the "ISOFIX Child Restraint Systems Installation Suitability" table by IUF. See *Where to Put the Restraint* ⇨ *81*.

Securing Child Restraints (With the Seat Belt in the Rear Seat)

When securing a child restraint in a rear seating position, study the instructions that came with the child restraint to make sure it is compatible with this vehicle.

If the child restraint has the ISOFIX system, see *ISOFIX Child Restraint Systems* ⇨ *86* for how and where to install the child restraint using ISOFIX. If a child restraint is secured in the vehicle using a safety belt and it uses a top tether, see *ISOFIX Child Restraint Systems* ⇨ *86* for top tether anchor locations.

Do not secure a child restraint in a position without a top tether anchor if a national or local law requires that the top tether be anchored or if the instructions that come with the child restraint say that the top strap must be anchored.

If the child restraint or vehicle seat position does not have the ISOFIX system, you will be using the seat belt to secure the child restraint. Be sure to follow the instructions that came with the child restraint.

If more than one child restraint needs to be installed in the rear seat, be sure to read *Where to Put the Restraint* ⇨ *81*.

1. Put the child restraint on the seat.
2. Pick up the latch plate, and run the lap and shoulder portions of the vehicle's safety belt through or around the restraint. The child restraint instructions will show you how.

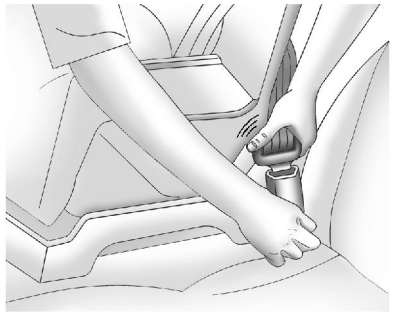

3. Push the latch plate into the buckle until it clicks.

   Position the release button on the buckle, away from the child restraint system, so that the seat belt could be quickly unfastened if necessary.

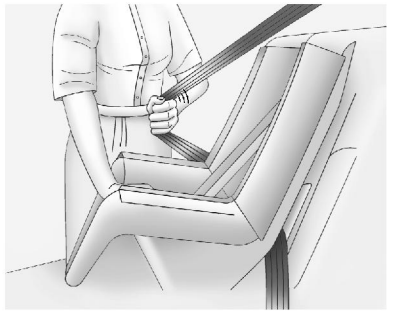

4. Pull the shoulder belt all the way out of the retractor to set the lock. When the retractor lock is set, the belt can be tightened but not pulled out of the retractor.

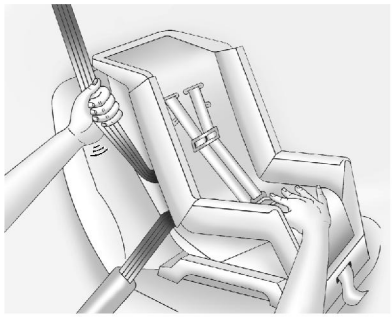

5. To tighten the belt, push down on the child restraint, pull the shoulder portion of the belt to tighten the lap portion of the belt, and feed the shoulder belt back into the retractor. When installing a forward-facing child restraint, it may be helpful to use your knee to push down on the child restraint as you tighten the belt.

   Try to pull the belt out of the retractor to make sure the retractor is locked. If the retractor is not locked, repeat Steps 4 and 5.

6. If the child restraint has a top tether, follow the child restraint manufacturer's instructions regarding the use of the top tether. See *ISOFIX Child Restraint Systems* ⇨ *86*.

7. Before placing a child in the child restraint, make sure it is securely held in place. Refer to your child restraint manufacturer instructions.

To remove the child restraint, unfasten the vehicle safety belt and let it return to the stowed position. If the top tether is attached to a top tether anchor, disconnect it.

Securing Child Restraints (With the Seat Belt in the Front Seat)

This vehicle has airbags. A rear seat is a safer place to secure a forward-facing child restraint. See *Where to Put the Restraint* ⇨ *81*.

In addition, the vehicle has a passenger sensing system which is designed to turn off the front outboard passenger frontal airbag and knee airbag under certain conditions. See *Passenger Sensing System* ⇨ *70* and *Passenger Airbag Status Indicator* ⇨ *108* for more information, including important safety information.

⚠ Warning

NEVER use a rearward-facing child restraint on a seat protected by an ACTIVE AIRBAG in front of it; DEATH or SERIOUS INJURY to the CHILD can occur.

⚠ Danger

When using a child restraint system on the front passenger seat, the airbag systems for the front passenger seat must be deactivated; if not, the triggering of the airbags poses a risk of fatal injury to the child.

(Continued)

Danger (Continued)

This is especially the case if rear-facing child restraint systems are used on the front passenger seat.



DO NOT place rear-facing child seat on this seat. DEATH OR SERIOUS INJURY can occur. This is because the risk to the rear-facing child is so great, if the airbag deploys.

If the child restraint uses a top tether, see *ISOFIX Child Restraint Systems* ⇨ *86* for top tether anchor locations.

Do not secure a child seat in a position without a top tether anchor if a national or local law requires that the top tether be anchored, or if the instructions that come with the child restraint say that the top strap must be anchored.

When using the lap-shoulder belt to secure the child restraint in this position, follow the instructions that came with the child restraint and the following instructions:

1. Move the seat rearward as far back as it will go and raise the seat upward as far as it will go before securing the forward-facing child restraint.

   When the passenger sensing system has turned off the front outboard passenger frontal airbag and knee airbag, the off indicator on the passenger airbag status indicator should light and stay lit when the vehicle is started. See *Passenger Airbag Status Indicator* ⇨ *108*.

2. Put the child restraint on the seat.

3. Pick up the latch plate, and run the lap and shoulder portions of the vehicle's safety belt through or around the restraint. The child restraint instructions will show you how.

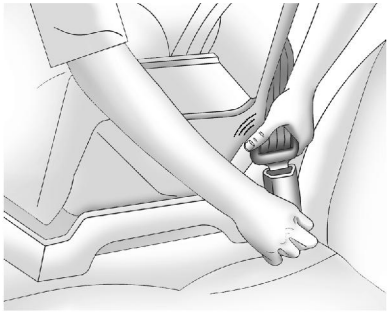

4. Push the latch plate into the buckle until it clicks.

   Position the release button on the buckle, away from the child restraint system, so that the seat belt could be quickly unfastened if necessary.

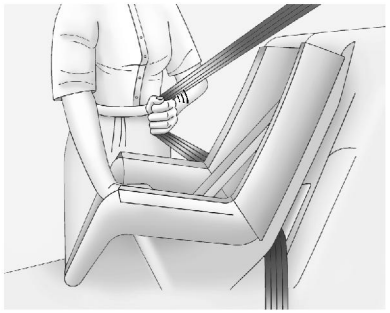

5. Pull the shoulder belt all the way out of the retractor to set the lock. When the retractor lock is set, the belt can be tightened but not pulled out of the retractor.

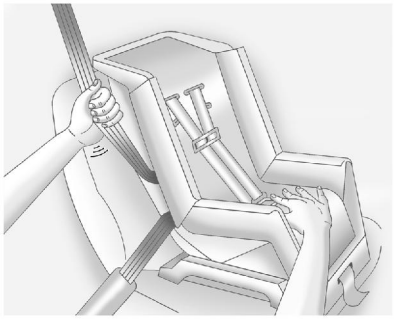

6. To tighten the belt, push down on the child restraint, pull the shoulder portion of the belt to tighten the lap portion of the belt, and feed the shoulder belt back into the retractor. When installing a forward-facing child restraint, it may be helpful to use your knee to push down on the child restraint as you tighten the belt.

   Try to pull the belt out of the retractor to make sure the retractor is locked. If the retractor is not locked, repeat Steps 5 and 6.

7. Before placing a child in the child restraint, make sure it is securely held in place. Push and pull the child restraint in different directions to be sure it is secure.

If the airbags are off, the off indicator in the passenger airbag status indicator will come on and stay on when the vehicle is started.

If a child restraint has been installed and the on indicator is lit, see “If the On Indicator Is Lit for a Child Restraint” under *Passenger Sensing System* ⇨ *70*.

To remove the child restraint, unfasten the vehicle safety belt and let it return to the stowed position.

Storage

Storage Compartments
Storage Compartments 91
Glove Box 91
Rear Storage 91
Centre Console Storage 92

Additional Storage Features
Convenience Net 92
Warning Triangle 92

Storage Compartments

⚠ Warning

Do not store heavy or sharp objects in storage compartments. In a crash, these objects may cause the cover to open and could result in injury.

Glove Box

Open the glove box by lifting up the lever. Use the key to lock and unlock the glove box.

Rear Storage

Rear Boot Partition

If equipped with a convertible top, there is a boot partition to keep cargo from getting in the way of the convertible top. The boot partition must be in place for the convertible top to move. If the boot partition is not properly in place, a message will display and a chime sounds. See *Convertible Top Messages* ⇨ *122*.

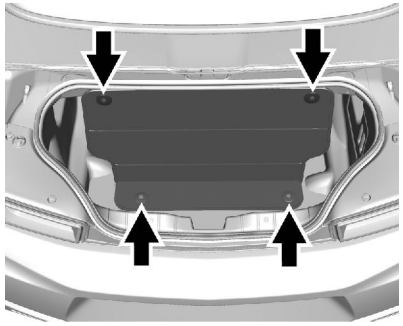

The boot partition can be attached or detached to upper boot brackets. With the convertible top up, the boot partition can be unsnapped and laid flat.

Pull the partition up and snap it into place on both sides and the bottom of the boot.

Centre Console Storage

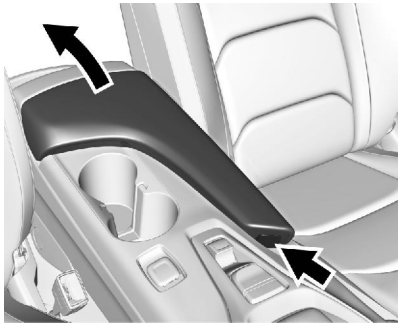

Press to open. There is a USB port and auxiliary jack inside. See “USB Port” and “Auxiliary Jack” in the infotainment manual.

Additional Storage Features

Convenience Net

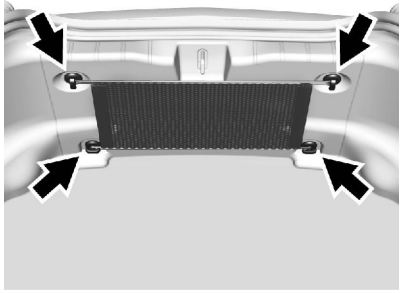

For vehicles with a convenience net inside the boot, it can be used to secure loose items.

Warning Triangle

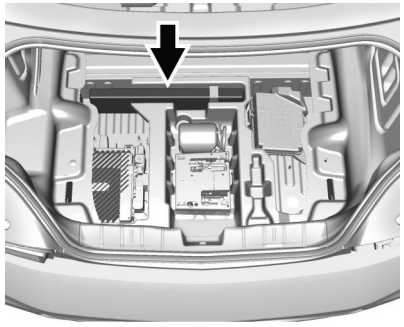

The warning triangle is stowed in the rear of the rear storage compartment.

Instruments and Controls

Controls

Steering Wheel Adjustment 94
Steering Wheel Controls 94
Heated Steering Wheel 94
Horn 95
Windscreen Wiper/Washer 95
Clock 96
Power Sockets 96
Wireless Charging 97

Warning Lights, Gauges, and Indicators

Warning Lights, Gauges, and Indicators 98
Instrument Cluster 99
Speedometer 103
Mileometer 103
Trip Odometer 103
Rev Counter 103
Fuel Gauge 103
Engine Oil Pressure Gauge (Uplevel Cluster Only) 104
Engine Coolant Temperature Gauge 105
Voltmeter Gauge 106
Safety Belt Reminders 107
Airbag Readiness Light 107
Passenger Airbag Status Indicator 108
Charging System Light 109
Malfunction Indicator Lamp (Check Engine Light) 109
Brake System Warning Light 111
Electric Parking Brake Light 111
Service Electric Parking Brake Light 112
Antilock Brake System (ABS) Warning Light 112
Traction Off Light 112
StabiliTrak® OFF Light 113
Traction Control System (TCS)/ StabiliTrak® Light 113
Tyre Pressure Light 113
Engine Oil Pressure Light 114
Low Fuel Warning Light 114
Security Light 114
High-Beam On Light 115
Rear Fog Lamp Light 115
Lamps On Reminder 115
Cruise Control Light 115
Door Ajar Light 115

Information Displays

Driver Information Centre (DIC) 116
Head-Up Display (HUD) 117

Vehicle Messages

Vehicle Messages 121
Battery Voltage and Charging Messages 121
Brake System Messages 121
Convertible Top Messages ... 122
Cruise Control Messages 123
Door Ajar Messages 123
Engine Cooling System Messages 123
Engine Oil Messages 124
Engine Power Messages 124
Fuel System Messages 125
Key and Lock Messages 125
Lamp Messages 125
Object Detection System Messages 125
Ride Control System Messages 126
Airbag System Messages 127
Security Messages 127
Service Vehicle Messages 127
Steering System Messages 128
Starting the Vehicle Messages 128
Tyre Messages 128
Transmission Messages 129

Vehicle Reminder Messages 130
Vehicle Speed Messages 130
Window Messages 130

Vehicle Personalisation
Vehicle Personalisation 131

Controls

Steering Wheel Adjustment



To adjust the tilt and telescoping steering wheel:

1. Pull the lever down.
2. Move the steering wheel up or down.
3. Pull or push the steering wheel closer or away from you.
4. Pull the lever up to lock the steering wheel in place.

Do not adjust the steering wheel while driving.

Steering Wheel Controls

The infotainment system can be operated by using the steering wheel controls. See "Steering Wheel Controls" in the infotainment manual.

Heated Steering Wheel



: Press to turn the heated steering wheel on or off. A light next to the button displays when the feature is turned on.

The steering wheel takes about three minutes to be fully heated.

Horn

Press on the steering wheel pad to sound the horn.

Windscreen Wiper/ Washer



The windscreen wiper/washer lever is on the right side of the steering column. With the ignition in ACC/ ACCESSORY or ON/RUN, move the windscreen wiper lever to select the wiper speed.

HI : Use for fast wipes.

LO : Use for slow wipes.



INT : Move the lever up to INT for intermittent wipes, then turn the INT band up for more frequent wipes or down for less frequent wipes.

OFF : Use to turn the wipers off.

1X : For a single wipe, briefly move the wiper lever down. For several wipes, hold the wiper lever down.

: Pull the windscreen wiper lever toward you to spray windscreen washer fluid and activate the wipers. The wipers will continue until the lever is released or the maximum wash time is reached. When the windscreen wiper lever is released, additional wipes may occur depending on how long the windscreen washer had been activated. See *Washer Fluid* ⇨ *219* for information on filling the windscreen washer fluid reservoir.

⚠ Warning

In freezing weather, do not use the washer until the windscreen is warmed. Otherwise the washer fluid can form ice on the windscreen, blocking your vision.

Clear snow and ice from the wiper blades and windscreen before using them. If frozen to the windscreen, carefully loosen or thaw them. Damaged blades should be replaced. See *Wiper Blade Replacement* ⇨ *224*.

Heavy snow or ice can overload the wiper motor.

Wiper Parking

If the ignition is turned to OFF while the wipers are on LO, HI, or INT, they will immediately stop.

If the windscreen wiper lever is then moved to OFF before the driver door is opened or within 10 minutes, the wipers will restart and move to the base of the windscreen.

If the ignition is turned to OFF while the wipers are performing wipes due to windscreen washing, the wipers continue to run until they reach the base of the windscreen.

Clock

Setting the Time and Date

To set the time:

1. Touch SETTINGS on the Home Page, then touch Time and Date.
2. Touch Set Time, then touch ∧ or ∨ to increase or decrease hours, minutes, and AM or PM. Touch 12-24 Hr for 12 or 24 hour clock.
3. Touch < to go back to the previous menu.

If auto timing is set, the time displayed on the clock may not update immediately when driving into a new time zone.

To set the date:

1. Touch SETTINGS on the Home Page, then touch Time and Date.
2. Touch Set Date, then touch ∧ or ∨ to increase or decrease month, day, or year.
3. Touch < to go back to the previous menu.

To set the clock display:

1. Touch SETTINGS on the Home Page, then touch Time and Date.
2. Touch Clock Display, then touch Off or On to turn the clock display off or on.
3. Touch < to go back to the previous menu.

Power Sockets

The vehicle has an accessory power socket on the centre floor console in front of the cupholders. It can be used to plug in electrical equipment, such as a mobile phone or an MP3 player.

The accessory power socket does not work when the ignition is turned off and the driver door is opened. This helps to preserve the battery life of the vehicle.

Certain power accessory plugs may not be compatible with the accessory power outlet and could overload vehicle and adapter fuses. If a problem is experienced, see your dealer.

Caution

Adding any electrical equipment to the vehicle may damage it or keep other components from working as they should. The repairs would not be covered by the vehicle warranty. Do not use equipment exceeding maximum amperage rating of 15 amperes. Check with your retailer before adding electrical equipment.

When adding electrical equipment, ensure that you follow the proper installation instructions included with the equipment. See *Add-On Electrical Equipment* ⇨ *201*.

Caution

Hanging heavy equipment from the power outlet can cause damage not covered by the vehicle warranty. The power outlets are designed for accessory power plugs only, such as mobile phone charge cords.

Wireless Charging

If equipped, the vehicle has wireless charging in the storage bin at the back of the floor console. The system wirelessly charges one PMA or Qi compatible mobile device. To check for phone or other device compatibility, see your retailer for details.

⚠ Warning

Wireless charging can affect the operation of an implanted pacemaker or other medical devices. If you have one, it is recommended to consult with your doctor before using the wireless charging system.

The vehicle must be in ON/RUN, ACC/ACCESSORY, or Retained Accessory Power (RAP). The wireless charging feature may not correctly indicate charging when the vehicle is in RAP. See *Retained Accessory Power (RAP)* ⇨ *170*.

The operating temperature is −20 °C (−4 °F) to 60 °C (140 °F) for the charging system and 0 °C (32 °F) to 35 °C (95 °F) for the phone.

⚠ Warning

Remove all metal objects from the charging pad before charging your mobile device. Metal objects,

(Continued)

Warning (Continued)

such as coins, keys, rings, or paper clips, between the phone and charging pad will become very hot. On the rare occasion that the charging system does not detect a metal object, and the object gets wedged between the phone and charger, remove the phone and allow the metallic object to cool before removing it from the charging pad, to prevent burns.

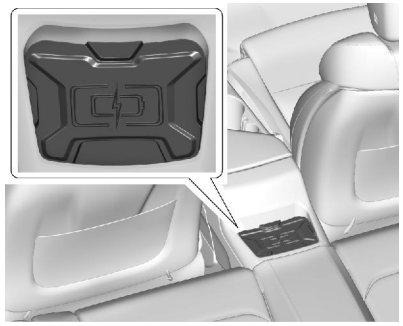

To charge a mobile device:

1. Remove all objects from the charging pad. The system may not charge if there are any objects on the charging pad.
2. Place the mobile device face up on the charging pad.
3. The ϟ will display on the ✆ on the infotainment screen. This indicates that the mobile device is properly positioned and charging. If a phone is placed on the charging pad and ϟ does not display, remove the phone from the pad, turn 180 degrees and wait three seconds before placing/aligning the phone on the pad again.

Warning Lights, Gauges, and Indicators

Warning lights and gauges can signal that something is wrong before it becomes serious enough to cause an expensive repair or replacement. Paying attention to the warning lights and gauges could prevent injury.

Some warning lights come on briefly when the engine is started to indicate they are working. When one of the warning lights comes on and stays on while driving, or when one of the gauges shows there may be a problem, check the section that explains what to do. Waiting to do repairs can be costly and even dangerous.

Instrument Cluster



Base Level

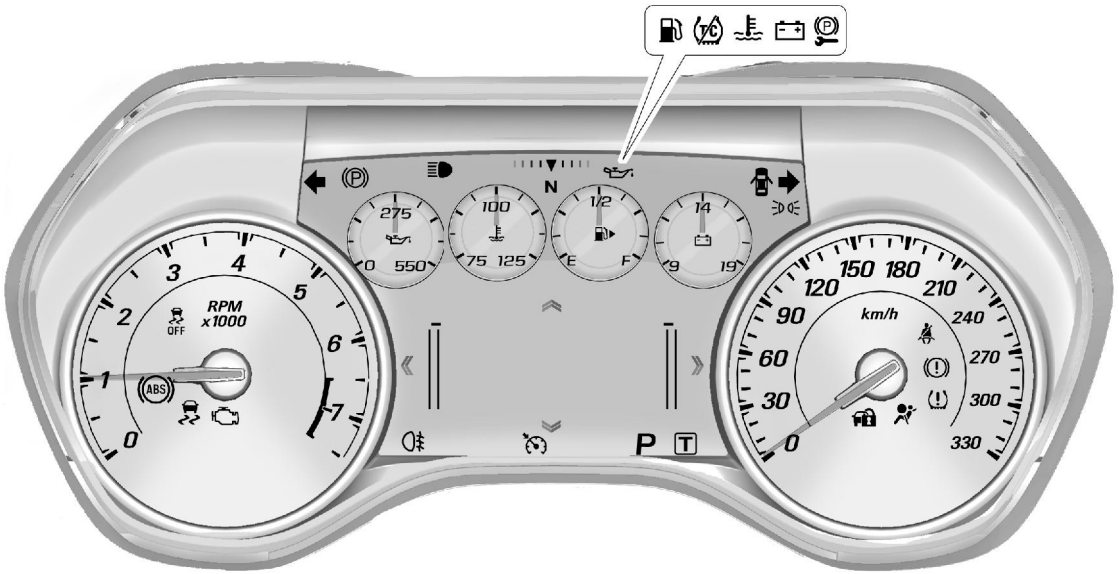

Uplevel

Reconfigurable Instrument Cluster

To change the theme for the uplevel cluster:

1. Find the Options page in one of the interactive display zones on the cluster.
2. Press SEL to enter the Options menu.
3. Scroll down to highlight Display Option, then press ▷ to enter the Display Option menu.
4. Press SEL to select the desired cluster configuration.
5. Exit the Display Option menu by pressing ◁.

Cluster Menu

There is an interactive display area in the centre of the instrument cluster.

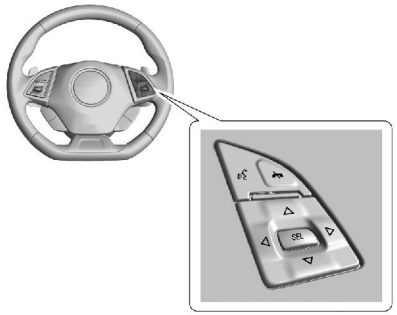

Use the right steering wheel control to open and scroll through the different items and displays.

Press ◁ to access the cluster applications. Use △ or ▽ to scroll through the list of applications. Press SEL to select the application from the list.

- Info. This is where you can view the Driver Information Centre (DIC) displays. See *Driver Information Centre (DIC)* ⇨ *116*.
- Performance (Uplevel Cluster)
- Audio (If Equipped)
- Phone (If Equipped)
- Navigation (If Equipped)
- Options or Settings

Performance (Uplevel Cluster)

Press SEL to enter the Performance menu. Use △ or ▽ to scroll through the available items.

Friction Bubble : A four quadrant visual display, indicative of the four corners of the car, with a “bubble” showing where the most inertia is being exerted on the vehicle.

Performance Timer : Press ▷ when Performance Timer is displayed to enter the menu. Press ▷ while Set Start Speed is highlighted then use △ or ▽ to enter the start speed. Press SEL to save it. Press ▷ while Set End Speed is highlighted then use △ or ▽ to enter the end speed. Press SEL to save it. After the start and end speeds have been entered, press ◁ to set the Sport display to the set speeds and the performance timer is ready to use. On the next acceleration, the performance time

will record the time. To reset the timer, highlight Reset on the performance timer menu and press SEL.

G-Force : Gives the driver an indication of the vehicle performance in cornering. The G-force is displayed in the centre of the DIC as a numerical value.

Lap Timer : Use to start, stop, or reset the lap timer. A stopwatch icon will be displayed when the lap timer is active. Press SEL while the Lap Timer page is active to start the timer. If the lamp timer is active, pressing SEL on any page will stop the current lap timer and start a new lap. Also, pressing and holding SEL on any page will stop the lap timer.

Oil Temperature : Shows the current oil temperature in either degrees Celsius (°C) or degrees Fahrenheit (°F).

Oil Pressure : Shows the current oil pressure in either kilopascal (kPa) or in pounds per square inch (psi).

Transmission Fluid Temperature : Shows the temperature of the transmission fluid in either degrees Celsius (°C) or degrees Fahrenheit (°F).

Audio

If equipped, while the audio app is open, use △ or ▽ to change the radio station or seek to the next or previous track, depending on the current audio source. Press ▷ to enter the Audio menu. In the Audio menu browse for music, select from the favourites, or change the audio source.

Phone

If equipped, press ▷ to enter the Phone menu. In the Phone menu, if there is no active phone call, view recent calls, or scroll through contacts. If there is an active call, mute or unmute the phone or switch to handset or hands-free operation.

Navigation

If equipped, press ▷ to enter the Navigation menu. This displays a map or turn by turn directions. If there is no active route, press ▷ to resume the last route and turn the voice prompts on/off. If there is an active route, press SEL to cancel route guidance or turn the voice prompts on/off.

Options or Settings

Press SEL to enter the Options or Settings menu. Use △ or ▽ to scroll through items in the menu.

Units : Press ▷ while Units is displayed to enter the Units menu. Choose US or Metric units by pressing SEL while the desired item is highlighted.

Speed Warning : The Speed Warning display allows the driver to set a speed that they do not want to exceed. To set the Speed Warning, press ▷ when Speed Warning is displayed. Enable the speed warning and then use △ or ▽ to

adjust the value. Press SEL to set the speed. Once the speed is set, this feature can be turned off by pressing SEL while viewing this page. If the selected speed limit is exceeded, a pop-up warning is displayed with a chime.

Display Option (Uplevel) : Press SEL while Display Option is highlighted to change the configuration of the uplevel cluster. See “Reconfigurable Instrument Cluster” earlier in this section.

Info Pages : Press ▷ while Info Pages is highlighted to select the items to be displayed in the DIC info displays. See *Driver Information Centre (DIC)* ⇨ *116*.

Software Info : Press ▷ while Software Info is highlighted to display open source software information.

Speedometer

The speedometer shows the vehicle's speed in either kilometres per hour (km/h) or miles per hour (mph).

Mileometer

The odometer shows how far the vehicle has been driven, in either kilometres or miles.

Trip Odometer

The trip odometer shows how far the vehicle has been driven since the trip odometer was last reset.

The trip odometer is accessed and reset through the Driver Information Centre (DIC). See *Driver Information Centre (DIC)* ⇨ *116*.

Rev Counter

The tachometer displays the engine speed in revolutions per minute (rpm).

Caution

If the engine is operated with the rpm in the warning area at the high end of the tachometer, the vehicle could be damaged, and the damage would not be covered

(Continued)

Caution (Continued)

by the vehicle warranty. Do not operate the engine with the rpm in the warning area.

Fuel Gauge

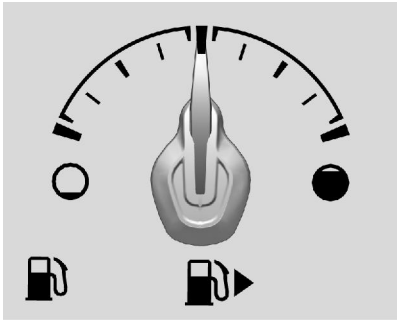

Base Level Cluster

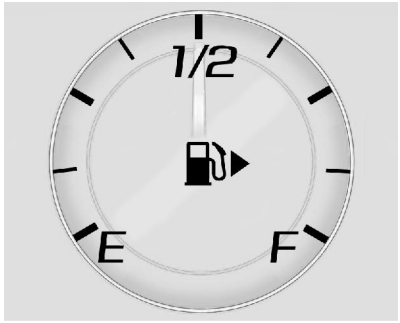

Uplevel Cluster

When the ignition is on, the fuel gauge indicates about how much fuel is left in the tank.

An arrow on the fuel gauge indicates the side of the vehicle the fuel door is on.

When the indicator nears empty, the low fuel light comes on. There is still a little fuel left, but the fuel tank should be filled soon.

Here are four things that some owners ask about. None of these show a problem with the fuel gauge:

- At the service station, the fuel pump shuts off before the gauge reads full.
- It takes a little more or less fuel to fill up than the gauge indicated. For example, the gauge indicated the tank was half full, but it actually took a little more or less than half the tank's capacity to fill the tank.
- The gauge moves a little while turning a corner or speeding up.
- The gauge takes a few seconds to stabilise after the ignition is turned on and goes back to empty when the ignition is turned off.

Engine Oil Pressure Gauge (Uplevel Cluster Only)

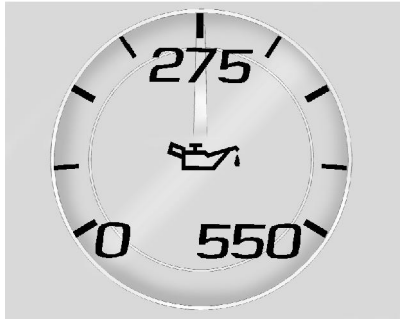

The engine oil pressure gauge shows the engine oil pressure in kPa (kilopascals) when the engine is running.

Oil pressure can vary with engine speed, outside temperature and oil viscosity.

On some models, the oil pump will vary engine oil pressure according to engine needs. Oil pressure may change quickly as the engine speed or load varies. This is normal.

If the oil pressure warning light or Driver Information Centre (DIC) message indicates oil pressure outside the normal operating range, check the vehicle's oil as soon as possible. See *Engine Oil Messages* ⇨ *124* and *Engine Oil* ⇨ *208*.

Caution

Lack of proper engine oil maintenance can damage the engine. Driving with the engine oil low can also damage the engine. The repairs would not be covered by the vehicle warranty. Check the oil level as soon as possible. Add oil if required, but if the oil level is within the operating range and the oil pressure is still low, have the vehicle serviced. Always follow the maintenance schedule for changing engine oil.

Engine Coolant Temperature Gauge

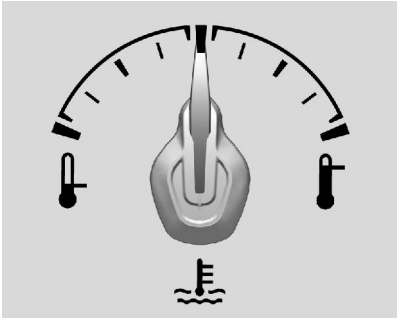

Base Level Cluster

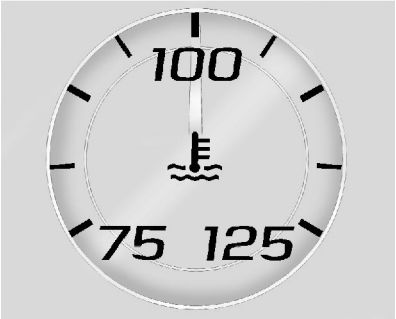

Uplevel Cluster

This gauge shows the engine coolant temperature.

The warning area at the far end of the gauge may appear shaded or may be coloured red.

If the pointer approaches the warning area, or the shaded thermostat symbol the engine may be too hot.

Under some driving conditions, including those listed below, it is normal for the temperature to rise above the usual operating range and approach the far end of the gauge:

- Stop and go driving in heavy traffic.
- High speed operation in warm weather.
- Uphill driving.

It is normal for the reading to fluctuate.

A warning light also illuminates when the engine is too hot.

If the gauge pointer reaches the warning area or the shaded thermostat symbol at the far end of the gauge and remains there for more than 30 seconds, the engine coolant has overheated.

If the engine coolant has overheated, pull over and stop the vehicle as soon as it is safe to do so. Then, turn the engine off immediately.

See *Engine Overheating* ⇨ *218*.

Voltmeter Gauge

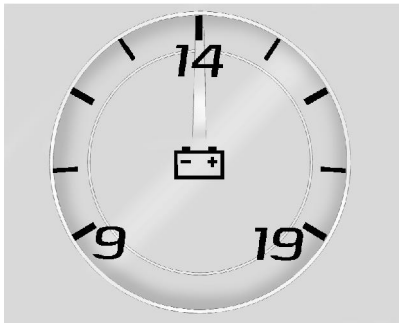

Standard Theme

When the ignition is on, this gauge indicates the battery voltage.

When the engine is running, this gauge shows the condition of the charging system. The gauge can transition from a higher to lower or a lower to higher reading. This is normal. If the vehicle is operating outside the normal operating range, the charging system light comes on. See *Charging System Light* ⇨ *109*.

Readings outside the normal operating range can also occur when a large number of electrical accessories are operating in the vehicle and the engine is left idling for an extended period. This condition is normal since the charging system is not able to provide full power at engine idle. As engine speeds are increased, this condition should correct itself as higher engine speeds allow the charging system to create maximum power.

The vehicle can only be driven for a short time with the readings outside the normal operating range. If the vehicle must be driven, turn off all accessories, such as the radio and air conditioner, and unplug all chargers and accessories.

Readings outside the normal operating range indicate a possible problem in the electrical system. Have the vehicle serviced as soon as possible.

Safety Belt Reminders

Driver Safety Belt Reminder Light

There is a driver safety belt reminder light on the instrument cluster.



When the vehicle is started, this light flashes and a chime may come on to remind the driver to fasten their safety belt. Then the light stays on solid until the belt is buckled. This cycle may continue several times if the driver remains or becomes unbuckled while the vehicle is moving.

If the driver safety belt is buckled, neither the light nor the chime comes on.

Passenger Seat Belt Reminder Light

There is a passenger safety belt reminder light near the passenger airbag status indicator. See *Passenger Sensing System* ⇨ *70*.



When the vehicle is started, this light flashes and a chime may come on to remind passengers to fasten their safety belt. Then the light stays on solid until the belt is buckled. This cycle continues several times if the passenger remains or becomes unbuckled while the vehicle is moving.

If the passenger safety belt is fastened, neither the chime nor the light comes on.

The front passenger safety belt reminder light and chime may turn on if an object is put on the seat such as a briefcase, handbag, grocery bag, laptop, or other electronic device. To turn off the reminder light and/or chime, remove the object from the seat or buckle the safety belt.

Airbag Readiness Light

This light shows if there is an electrical problem with the airbag system. The system check includes the airbag sensor(s), the passenger sensing system, the pretensioners, the airbag modules, the wiring, and the crash sensing and diagnostic module. For more information on the airbag system, see *Air-Bag System* ⇨ *63*.



The airbag readiness light comes on for several seconds when the vehicle is started. If the light does not come on then, have it fixed immediately.

⚠ Warning

If the airbag readiness light stays on after the vehicle is started or comes on while driving, it means the airbag system might not be working properly. The airbags in the vehicle might not inflate in a crash, or they could even inflate without a crash. To help avoid injury, have the vehicle serviced right away.

If there is a problem with the airbag system, a Driver Information Centre (DIC) message may also come on. See *Airbag System Messages* ⇨ *127*.

Passenger Airbag Status Indicator

The vehicle has a passenger sensing system. See *Passenger Sensing System* ⇨ *70* for important safety information. The overhead console has a passenger airbag status indicator.



When the vehicle is started, the passenger airbag status indicator will light the symbol for on and off for several seconds as a system check. Then, after several seconds, the status indicator will light either the on or off symbol to let you know the status of the front outboard passenger frontal airbag and knee airbag.

If the on symbol is lit on the passenger airbag status indicator, it means that the front outboard passenger frontal airbag and knee airbag are allowed to inflate.

If the off symbol is lit on the passenger airbag status indicator, it means that the passenger sensing system has turned off the front outboard passenger frontal airbag and knee airbag.

If, after several seconds, both status indicator lights remain on, or if there are no lights at all, there may be a problem with the lights or the passenger sensing system. See your retailer for service.

⚠ Warning

If the airbag readiness light ever comes on and stays on, it means that something may be wrong with the airbag system. To help avoid injury to yourself or others, have the vehicle serviced right away. See *Airbag Readiness Light* ⇨ *107* for more information, including important safety information.

Charging System Light

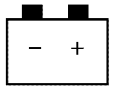

The charging system light comes on briefly when the ignition is turned on, but the engine is not running, as a check to show the light is working. It should go out when the engine is started.

If the light stays on or comes on while driving, there may be a problem with the electrical charging system. Have it checked by your dealer. Driving while this light is on could drain the battery.

When this light comes on, the Driver Information Centre (DIC) also displays a message. See *Battery Voltage and Charging Messages* ⇨ *121*.

If a short distance must be driven with the light on, be sure to turn off all accessories, such as the radio and air conditioner.

Malfunction Indicator Lamp (Check Engine Light)

This light is part of the vehicle's emission control on-board diagnostic system. If this light is on while the engine is running, a malfunction has been detected and the vehicle may require service. The light should come on to show that it is working when the ignition is in Service Only Mode. See *Ignition Positions* ⇨ *166*.



Malfunctions are often indicated by the system before any problem is noticeable. Being aware of the light and seeking service promptly when it comes on may prevent damage.

Caution

If the vehicle is driven continually with this light on, the emission control system may not work as well, the fuel economy may be lower, and the vehicle may not run smoothly. This could lead to costly repairs that might not be covered by the vehicle warranty.

Caution

Modifications to the engine, transmission, exhaust, intake, or fuel system, or the use of replacement tyres that do not meet the original tyre specifications, can cause this light to come on. This could lead to costly repairs not covered by the vehicle warranty. This could also affect the vehicle's ability to pass an Emissions Inspection/ Maintenance test. See *Accessories and Modifications* ⇨ *203*.

If the light is flashing : A malfunction has been detected that could damage the emission control system and increase vehicle emissions. Diagnosis and service may be required.

To help prevent damage, reduce vehicle speed and avoid hard accelerations and uphill gradients.

If the light continues to flash, find a safe place to park. Turn the vehicle off and wait at least 10 seconds before restarting the engine. If the light is still flashing, follow the previous guidelines and see your retailer for service as soon as possible.

If the light is on continuously : A malfunction has been detected. Diagnosis and service may be required.

Check the following:

- If fuel has been added to the vehicle using the capless funnel adapter, make sure that it has been removed. See “Filling the Tank with a Portable Gas Can” under *Filling the Tank* ⇨ *198*. The diagnostic system can detect if the adapter has been left installed in the vehicle, allowing fuel to evaporate into the atmosphere. A few driving trips with the adapter removed may turn off the light.
- Poor fuel quality can cause inefficient engine operation and poor driveability, which may go away once the engine is warmed up. If this occurs, change the fuel brand. It may require at least one full tank of the proper fuel to turn the light off. See *Fuel* ⇨ *198*.

If the light remains on, see your retailer.

Emissions Inspection and Maintenance Programs

If the vehicle requires an Emissions Inspection/Maintenance test, the test equipment will likely connect to the vehicle's Data Link Connector (DLC).

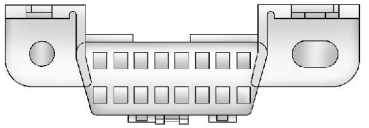

The DLC is under the instrument panel to the left of the steering wheel. Connecting devices that are not used to perform an Emissions Inspection/Maintenance test or to service the vehicle may affect vehicle operation. See *Add-On Electrical Equipment* ⇨ *201*. See your dealer if assistance is needed.

The vehicle may not pass inspection if:

- The light is on when the engine is running.
- The light does not come on when the ignition is in Service Only Mode.
- Critical emission control systems have not been completely diagnosed. If this happens, the vehicle would not be ready for inspection and might require several days of routine driving

before the system is ready for inspection. This can happen if the 12-volt battery has recently been replaced or run down, or if the vehicle has been recently serviced.

See your retailer if the vehicle will not pass or cannot be made ready for the test.

Brake System Warning Light

The vehicle brake system consists of two hydraulic circuits. If one circuit is not working, the remaining circuit can still work to stop the vehicle. For normal braking performance, both circuits need to be working.

If the warning light comes on, there is a problem with the braking system. Have the brake system inspected immediately.



This light should come on briefly when the engine is started. If it does not come on then, have it fixed so it will be ready to warn you if there is a problem.

If the light comes on and stays on, there is a basic braking system problem.

⚠ Warning

The brake system might not be working properly if the brake system warning light is on. Driving with the brake system warning light on can lead to a crash. If the light is still on after the vehicle has been pulled off the road and carefully stopped, have the vehicle towed for service.

Electric Parking Brake Light



The parking brake status light comes on when the parking brake is applied. If the light continues flashing after the parking brake is released, or while driving, there is a problem with the electric parking brake system or another system. A message may also display in the Driver Information Centre (DIC). See *Brake System Messages* ⇨ *121*.

If the light does not come on, or remains flashing, see your dealer.

Service Electric Parking Brake Light



The service electric parking brake light should come on briefly when starting the vehicle. If it does not come on, have the vehicle serviced by your dealer.

If this light stays on, there is a problem with a system on the vehicle that is causing the parking brake system to work at a reduced level. The vehicle can still be driven, but should be taken to a dealer as soon as possible. See *Electric Parking Brake* ⇨ *180*. If a message displays in the Driver Information Centre (DIC), see *Brake System Messages* ⇨ *121*.

Antilock Brake System (ABS) Warning Light



This light comes on briefly when the engine is started.

If the light does not come on, have it fixed so it will be ready to warn if there is a problem.

If the light comes on while driving, stop as soon as it is safely possible and turn off the vehicle. Then start the engine again to reset the system. If the ABS light stays on, or comes on again while driving, the vehicle needs service. A chime may also sound when the light comes on steady.

If the ABS light is the only light on, the vehicle has regular brakes, but the anti-lock brakes are not functioning.

If both the ABS and the brake system warning light are on, the vehicle's anti-lock brakes are not functioning and there is a problem with the regular brakes. See your retailer for service.

See *Brake System Warning Light* ⇨ *111* and *Brake System Messages* ⇨ *121*.

Traction Off Light



This light comes on briefly while starting the engine. If it does not, have the vehicle serviced by your dealer. If the system is working normally, the indicator light then turns off.

The traction off light comes on when the Traction Control System (TCS) has been turned off by pressing and releasing the TCS/StabiliTrak button.

This light and the StabiliTrak OFF light come on when StabiliTrak is turned off.

If the TCS is off, wheel spin is not limited. Adjust driving accordingly.

See *Traction Control/Electronic Stability Control* ⇨ *182*.

StabiliTrak® OFF Light



This light comes on briefly while starting the engine. If it does not, have the vehicle serviced by your dealer.

This light comes on when the StabiliTrak system is turned off. If StabiliTrak is off, the Traction Control System (TCS) is also off.

If StabiliTrak and TCS are off, the system does not assist in controlling the vehicle. Turn on the TCS and the StabiliTrak systems, and the warning light turns off.

See *Traction Control/Electronic Stability Control* ⇨ *182*.

Traction Control System (TCS)/StabiliTrak® Light



This light comes on briefly when the engine is started.

If the light does not come on, have the vehicle serviced by your dealer. If the system is working normally, the indicator light turns off.

If the light is on and not flashing, the TCS and potentially the StabiliTrak system have been disabled. A Driver Information Centre (DIC) message may display. Check the DIC messages to determine which feature(s) is no longer functioning and whether the vehicle requires service. See *Ride Control System Messages* ⇨ *126*.

If the light is on and flashing, the TCS and/or the StabiliTrak system is actively working.

See *Traction Control/Electronic Stability Control* ⇨ *182*.

Tyre Pressure Light



For vehicles with the Tyre Pressure Monitor System (TPMS), this light comes on briefly when the engine is started. It provides information about tyre pressures and the TPMS.

When the Light Is On Steady

This indicates that one or more of the tyres are significantly underinflated.

A Driver Information Centre (DIC) tyre pressure message may also display. See *Tyre Messages* ⇨ *128*. Stop as soon as possible, and inflate the tyres to the pressure value shown on the Tyre and Loading Information label. See *Tyre Pressure* ⇨ *239*.

When the Light Flashes First and Then Is On Steady

If the light flashes for about a minute and then stays on, there may be a problem with the TPMS. If the problem is not corrected, the light will come on at every ignition cycle. See *Tyre Pressure Monitor Operation* ⇨ *241*.

Engine Oil Pressure Light

Caution

Lack of proper engine oil maintenance can damage the engine. Driving with the engine oil low can also damage the engine. The repairs would not be covered

(Continued)

Caution (Continued)

by the vehicle warranty. Check the oil level as soon as possible. Add oil if required, but if the oil level is within the operating range and the oil pressure is still low, have the vehicle serviced. Always follow the maintenance schedule for changing engine oil.

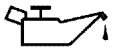

This light should come on briefly as the engine is started. If it does not come on, have the vehicle serviced by your dealer.

If the light comes on and stays on, it means that oil is not flowing through the engine properly. The vehicle could be low on oil and might have some other system problem. See your dealer.

Low Fuel Warning Light



This light is near the fuel gauge and comes on briefly when the ignition is turned on as a check to show it is working.

It also comes on when the fuel tank is low on fuel. The light turns off when fuel is added. If it does not, have the vehicle serviced.

Security Light



The security light should come on briefly as the engine is started. If it does not come on, have the vehicle

serviced by your dealer. If the system is working normally, the indicator light turns off.

If the light stays on and the engine does not start, there could be a problem with the theft-deterrent system. See *Immobiliser Operation* ⇨ *38*.

High-Beam On Light



This light comes on when the high-beam headlamps are in use.

See *Headlamp Main/Dipped-Beam Changer* ⇨ *139*.

Rear Fog Lamp Light



This light comes on when the rear fog lamps are in use.

See *Fog Lamps* ⇨ *141*.

Lamps On Reminder



This light comes on when the exterior lamps are in use. See *Exterior Lamp Controls* ⇨ *138*.

Cruise Control Light



The cruise control light is white when the cruise control is on and ready, and turns green when the cruise control is set and active.

The light goes out when the cruise control is turned off. See *Cruise Control* ⇨ *190*.

Door Ajar Light



This light comes on when a door is open or not securely latched. Before driving, check that all doors are properly closed.

Information Displays

Driver Information Centre (DIC)

The DIC displays are shown in the centre of the instrument cluster in the Info application. See *Instrument Cluster* ⇨ *99*. The Info application is only available when the vehicle is in ON/RUN. The displays show the status of many vehicle systems. The controls for the DIC are on the right steering wheel control.

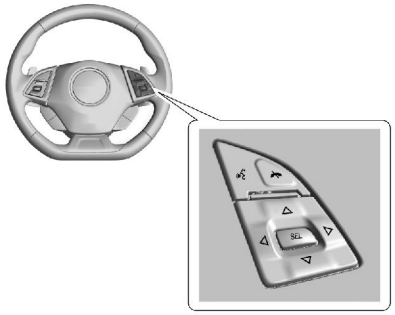

△ **or** ▽ **:** Press to move up or down in a list.

◁ **or** ▷ **:** Press ◁ to open application menus on the left. Press ▷ to open interaction menus on the right.

SEL : Press to select a menu item. Press and hold to reset values on certain screens.

DIC Info Pages

The following is the list of all possible DIC info displays. Depending on the vehicle, some may not be available. Some items may not be turned on by default but can be turned on through the Settings or Options app.

Current Speed : Displays the vehicle speed in either kilometres per hour (km/h) or miles per hour (mph).

Trip A or B/Average Fuel Economy : Trip displays the current distance travelled, in either kilometres (km) or miles (mi), since the trip odometer was last reset. The trip odometer can be reset by pressing and holding SEL while this display is active.

Average Fuel Economy displays the approximate average litres per 100 kilometres (L/100 km) or miles per gallon (mpg). This number is calculated based on the number of L/100 km (mpg) recorded since the last time this menu item was reset. This number reflects only the approximate average fuel economy that the vehicle has right now, and will change as driving conditions change. The Average Fuel Economy can be reset by pressing and holding SEL while this display is active.

Fuel Range/Instantaneous Fuel Economy : Fuel Range displays the approximate distance the vehicle can be driven without refuelling. LOW will be displayed when the vehicle is low on fuel. The fuel range estimate is based on an average of the vehicle's fuel economy over recent driving history and the amount of fuel remaining in the fuel tank.

Instantaneous Fuel Economy displays the current fuel economy in either litres per 100 kilometres (L/100 km) or miles per gallon

(mpg). This number reflects only the approximate fuel economy that the vehicle has right now and changes frequently as driving conditions change.

This display may also show the number of cylinders the vehicle is running on. See *Active Fuel Management® ⇨ 172*.

Fuel Economy Last XXX : Displays the average fuel economy over a set number of kilometres or miles.

Average Speed : Displays the average speed of the vehicle in kilometres per hour (km/h) or miles per hour (mph). This average is calculated based on the various vehicle speeds recorded since the last reset of this value. The average speed can be reset by pressing and holding SEL while this display is active.

Timer : This display can be used as a timer. To start/stop the timer, press ▷ while this display is active and then SEL to start/stop the timer. The display will show the amount of time that has passed since the timer was last reset. To reset the timer to zero, press and hold SEL or use ▷ to access the menu while this display is active.

Oil Life : Displays an estimate of the oil's remaining useful life. If REMAINING OIL LIFE 99% is displayed, that means 99% of the current oil life remains.

When the remaining oil life is low, the CHANGE ENGINE OIL SOON message will appear on the display. See *Engine Oil Messages ⇨ 124*. The oil should be changed as soon as possible. See *Engine Oil ⇨ 208*. In addition to the engine oil life system monitoring the oil life, additional maintenance is recommended in the Maintenance Schedule booklet.

The Oil Life display must be reset after each oil change. It will not reset itself. See *Engine Oil Life System ⇨ 210*.

Coolant Temperature : Displays the coolant temperature in either degrees Celsius (°C) or degrees Fahrenheit (°F).

Tyre Pressure : Displays the approximate pressures of all four tyres. Tyre pressure is displayed in either kilopascal (kPa) or in pounds per square inch (psi). If the pressure is low, the value for that tyre is shown in amber. See *Tyre Pressure Monitor System ⇨ 240* and *Tyre Pressure Monitor Operation ⇨ 241*.

Battery Voltage : Displays the current battery voltage. The battery voltage can fluctuate while viewing this information on the DIC. This is normal.

Blank : Shows no information.

Head-Up Display (HUD)

⚠ Warning

If the HUD image is too bright or too high in your field of view, it may take you more time to see things you need to see when it is dark outside. Be sure to keep the HUD image dim and placed low in your field of view.

HUD projects some information concerning the operation of the vehicle onto the windscreen.

The HUD information appears as an image focused out toward the front of the vehicle.

Caution

If you try to use the HUD image as a parking aid, you may misjudge the distance and damage your vehicle. Do not use the HUD image as a parking aid.

The HUD information can be displayed in various languages. The speedometer reading and other numerical values can be displayed in either English or metric units.

The language of the HUD information displayed can be changed. The speedometer reading and other numerical values can be displayed in either English or metric units.

The language selection is changed through the radio and the units of measurement is changed through the instrument cluster. See *Vehicle Personalisation* ⇨ *131* and "Options or Settings" under *Instrument Cluster* ⇨ *99*.



HUD Display on the Vehicle Windscreen

The HUD may display different alerts and information for vehicles equipped with these features:

- Speedometer
- Rev Counter
- Transmission Positions
- Manual Paddle Shift Gear Indicator (If Equipped)

  These displays on the HUD are for use when using the manual paddle shift controls to shift the transmission. See "Tap Shift" under *Manual Mode* ⇨ *175*.
- Shift Lights

  These lights are used for performance driving to indicate that the vehicle's best performance level has been reached to shift the transmission into the next higher gear.
- G-Force Gauge
- Audio Information
- Upcoming Manoeuvre from OnBoard Navigation
- Incoming Call



The HUD control is to the left of the steering wheel.

To adjust the HUD image:

1. Adjust the driver seat.
2. Start the engine.
3. Use the following settings to adjust the HUD.

HUD : Press down or lift up to centre the HUD image. The HUD image can only be adjusted up and down, not side to side.

INFO : Press to select the display view. Each press will change the display view.

±☼ : Lift up and hold to brighten the display. Press down and hold to dim the display. Hold down to turn the display off.

The HUD image will automatically dim and brighten to compensate for outside lighting. The HUD brightness control can also be adjusted as needed.

The HUD image can temporarily light up depending on the angle and position of the sunlight on the HUD display. This is normal.

Polarised sunglasses could make the HUD image harder to see.

There are four views in the HUD. Some vehicle information and vehicle messages or alerts may be displayed in any view.



Speed View : This display gives the speedometer reading, indicator indication, transmission positions (for automatic transmission vehicles only), and speed alert.



Audio/Phone View : This displays the speed view along with audio/phone information. The current radio station, media type, and incoming calls may be displayed.

All HUD views may briefly display audio information when the driver uses the steering wheel controls to adjust the audio settings appearing in the instrument cluster.

Incoming phone calls appearing in the instrument cluster may also display in any HUD view.



Navigation View : This displays the speed view along with Turn-by-Turn Navigation information. When navigation routing is not active, the compass heading is displayed.

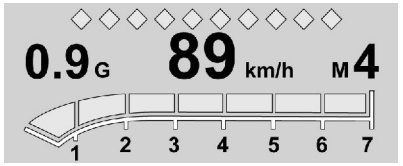

Performance View : This display gives the speedometer reading, rpm reading, transmission positions (for automatic transmission vehicles only), Shift Timing Light Position, and lateral acceleration (G) indicators. The radio, CD, navigation, and phone information do not appear in this HUD display.

The shift timing lights at the top of the display will appear with increases in engine rpm. The rows of lights get closer together as the shift point gets closer. Shift the transmission before the lights come together in the display. Shift immediately if the lights are flashing. See *Manual Transmission* ⇨ *178* or "Tap Shift" under *Manual Mode* ⇨ *175*.

All views, except Performance View, will show Turn-by-Turn Navigation information and provide details about the next driving maneuver to be made.

Care of the HUD

Clean the inside of the windscreen as needed to remove any dirt or film that could reduce the sharpness or clarity of the HUD image.

Clean the HUD lens with a soft cloth sprayed with glass cleaner. Wipe the lens gently, then dry it.

HUD Troubleshooting

Check that:

- Nothing Is covering the HUD lens.
- HUD brightness is not too dim or too bright.
- HUD is adjusted to the proper height.
- Polarised sunglasses are not worn.
- Windscreen and HUD lens are clean.

If the HUD image is not correct, contact your dealer.

The windscreen is part of the HUD system. See *Windshield Replacement* ⇨ *225*.

Vehicle Messages

Messages displayed on the DIC indicate the status of the vehicle or some action that may be needed to correct a condition. Multiple messages may display one after the other.

The messages that do not require immediate action can be acknowledged and cleared by pressing SEL. The messages that require immediate action cannot be cleared until that action is performed. All messages should be taken seriously and clearing the messages does not correct the problem.

The following are some of the vehicle messages that may be displayed depending on the vehicle content.

Battery Voltage and Charging Messages

BATTERY SAVER ACTIVE

This message displays when the vehicle has detected that the battery voltage is dropping beyond a reasonable point. The battery saver system starts reducing features of the vehicle that may be noticed. At the point that features are disabled, this message displays. Turn off unnecessary accessories to allow the battery to recharge.

LOW BATTERY

This message is displayed when the battery voltage is low. See *Battery* ⇨ *222*.

SERVICE BATTERY CHARGING SYSTEM

This message is displayed when there is a fault in the battery charging system. Take the vehicle to your dealer for service.

Brake System Messages

BRAKE FLUID LOW

This message is displayed when the brake fluid level is low. See *Brake Fluid* ⇨ *221*.

RELEASE PARKING BRAKE

This message is displayed if the Electric Parking Brake is on while the vehicle is in motion. See *Electric Parking Brake* ⇨ *180*.

SERVICE BRAKE ASSIST

This message may be displayed when there is a problem with the brake boost assist system. When this message is displayed, the brake boost assist motor might be heard operating and you might notice pulsation in the brake pedal. This is normal under these conditions. Take the vehicle to your dealer for service.

SERVICE PARKING BRAKE

This message is displayed when there is a problem with the parking brake. Take the vehicle to your dealer for service.

STEP ON BRAKE TO RELEASE PARK BRAKE

This message is displayed if you attempt to release the Electric Parking Brake without the brake pedal applied. See *Electric Parking Brake* ⇨ *180*.

Convertible Top Messages

The following messages are for vehicles with a power convertible top.

ATTACH TRUNK PARTITION TO OPERATE TOP

This message displays and a sound will be heard if the boot partition is not in place. Open the hatch/boot and make sure the boot partition is secure and no objects are on the boot partition.

BATTERY VOLTAGE TOO LOW – TOP DISABLED

This message displays when the battery voltage is too low to operate the convertible top.

CLOSE BOOT TO MOVE TOP

This message displays if the boot is open while you are trying to operate the convertible top. Make sure the boot is closed before operating the convertible top.

FOLDING TOP MOTION COMPLETE

This message displays when the top successfully completes an open/close cycle.

FOLDING TOP NOT SECURE COMPLETE TOP MOTION

This message occurs if the top is not secure. Several beeps will sound. Complete the power open or power close cycle for the top. If it is not possible to move the top to a fully open or fully closed position, make sure that all objects are clear of the path of the top system components.

ONLY MANUAL OPERATION OF TOP POSSIBLE

This message indicates that the position of the top cannot be fully determined by the power convertible top controls. Try moving the top in the other direction. This message will also be displayed if a fault is detected by the convertible top controls. See “Manual Movement of Top” under *Convertible Top* ⇨ *45*.

REDUCE VEHICLE SPEED TO OPERATE TOP

This message is displayed when the vehicle speed exceeds or is approaching the convertible top speed cut off.

TEMPERATURE TOO LOW – TOP DISABLED

This message displays and a sound will be heard when the power convertible top switch is pressed and it is too cold to operate the power convertible top. Move the vehicle to a warmer location and wait for the vehicle temperature to rise. This may take several hours

depending on the initial vehicle temperature and the temperature of the new location.

TOP NOT SECURE

This message displays when the power convertible top is not completely opened or closed. Press and hold the convertible top switch until the top is fully opened or closed. This is indicated by the FOLDING TOP MOTION COMPLETE message being displayed.

TOP POWERING DOWN COMPLETE TOP MOTION

This message displays when the power convertible top can no longer hold the top in an intermediate position. Top system components may move during this time based on external forces. Keep objects clear from the normal path of movement for the top system components.

TOP SYSTEM OVERHEATED, PLEASE WAIT

This message displays and a sound will be heard when the power convertible top switch is pressed and the power convertible top pump motor temperature is overheated. Wait for the power convertible top pump motor to cool down before using the power convertible top.

VALET SWITCH ACTIVE – TOP DISABLED

This message displays when Valet Mode is active. See "Valet Mode (If Equipped)" in the infotainment manual.

Cruise Control Messages

CRUISE SET TO XXX

This message displays when the cruise control is set and shows the speed it was set to. See *Cruise Control* ⇨ *190*.

Door Ajar Messages

DOOR OPEN

A door open symbol will display on the DIC showing which door is open. The DOOR OPEN message may also display if the vehicle starts to move. Close the door completely.

BONNET OPEN

This message will display along with a bonnet open symbol when the bonnet is open. Close the bonnet completely.

BOOT OPEN

This message will display along with a symbol when the boot is open. Close the boot completely.

Engine Cooling System Messages

A/C OFF DUE TO HIGH ENGINE TEMP

This message displays when the engine coolant becomes hotter than the normal operating temperature. To avoid added strain on a hot

engine, the air conditioning compressor automatically turns off. When the coolant temperature returns to normal, the air conditioning compressor turns back on. The vehicle can continue to be driven.

If this message continues to appear, have the system repaired by your dealer as soon as possible to avoid damage to the engine.

ENGINE OVERHEATING — IDLE ENGINE

This message displays when the engine coolant temperature is too hot. Stop and allow the vehicle to idle until it cools down.

Engine Oil Messages

CHANGE ENGINE OIL SOON

This message displays when the engine oil needs to be changed. When you change the engine oil, be sure to reset the Oil Life System. See *Engine Oil Life System* ⇨ *210*, *Driver Information Centre (DIC)* ⇨ *116*, *Engine Oil* ⇨ *208* and *Scheduled Maintenance* ⇨ *270*.

ENGINE OIL HOT, IDLE ENGINE

This message displays when the engine oil temperature is too hot. Stop and allow the vehicle to idle until it cools down.

ENGINE OIL LOW — ADD OIL

On some vehicles, this message displays when the engine oil level may be too low. Check the oil level before filling to the recommended level. If the oil is not low and this message remains on, take the vehicle to your dealer for service. See *Engine Oil* ⇨ *208*.

OIL PRESSURE LOW — STOP ENGINE

This message displays if low oil pressure levels occur. Stop the vehicle as soon as safely possible, turn off the engine, and do not operate it until the cause of the low oil pressure has been corrected. Check the oil as soon as possible and have the vehicle serviced by your dealer.

UPSHIFT NOW, ENGINE PROTECTION ACTIVE

This message indicates the engine controls have taken action to prevent an oil starvation condition. This may reduce the available engine power, or on automatic transmission equipped vehicles force an upshift to a higher gear.

Engine Power Messages

ENGINE POWER IS REDUCED

This message displays when the vehicle's engine power is reduced. Reduced engine power can affect the vehicle's ability to accelerate. If this message is on, but there is no reduction in performance, proceed to your destination. The performance may be reduced the next time the vehicle is driven. The vehicle may be driven at a reduced speed while this message is on, but maximum acceleration and speed may be reduced. Anytime this message stays on, or displays repeatedly, the vehicle should be taken to your dealer for service as soon as possible.

Fuel System Messages

FUEL LEVEL LOW

This message displays when the vehicle is low on fuel. Refuel as soon as possible.

Key and Lock Messages

KEYS PROGRAMMED

This message displays when programming new keys to the vehicle.

NO REMOTE DETECTED

This message displays when the transmitter battery may be weak. See "Starting the Vehicle with a Low Transmitter Battery" under *Remote Keyless Entry (RKE) System Operation* ⇨ *24*.

NO REMOTE KEY WAS DETECTED PLACE KEY IN TRANSMITTER POCKET THEN START YOUR VEHICLE

This message displays when trying to start the vehicle if an RKE transmitter is not detected. The transmitter battery may be weak. See "Starting the Vehicle with a Low Transmitter Battery" under *Remote Keyless Entry (RKE) System Operation* ⇨ *24*.

NO REMOTE DETECTED PRESS BRAKE TO RESTART or NO REMOTE DETECTED PRESS CLUTCH TO RESTART

This message displays if the RKE transmitter is no longer detected in the vehicle. Press the brake pedal or clutch and the engine start/stop button to restart the vehicle.

REMOTE LEFT IN VEHICLE

This message displays when leaving the vehicle with the RKE transmitter still inside.

REPLACE BATTERY IN REMOTE KEY

This message displays when the battery in the RKE transmitter needs to be replaced.

Lamp Messages

AUTOMATIC LIGHT CONTROL ON/OFF

This message is displayed when the automatic light control has been turned on or off. See *Automatic Headlamp System* ⇨ *139*.

INDICATOR ON

This message is displayed if the indicator has been left on. Turn off the indicator.

Object Detection System Messages

LANE CHANGE ALERT OFF

This message indicates that the driver has turned the Side Blind Zone Alert (SBZA) and Lane Change Alert (LCA) systems off.

PARK ASSIST OFF

This message displays when the Parking Assist system has been turned off or when there is a temporary condition causing the system to be disabled.

SERVICE PARK ASSIST

This message displays if there is a problem with the Parking Assist system. Do not use this system to help you park. See your retailer for service.

SERVICE SIDE DETECTION SYSTEM

If this message remains on after continued driving, the vehicle needs service. Side Blind Zone Alert (SBZA), Lane Change Alert (LCA), and Rear Cross Traffic Alert (RCTA) features will not work. Take the vehicle to your dealer.

SIDE DETECTION SYSTEM UNAVAILABLE

This message indicates that Side Blind Zone Alert (SBZA), Lane Change Alert (LCA), and Rear Cross Traffic Alert (RCTA) are disabled either because the sensor is blocked and cannot detect vehicles in the blind zone, or the vehicle is passing through an open area, such as the desert, where there is insufficient data for operation. This message may also activate during heavy rain or due to road spray. The vehicle does not need service. For cleaning, see "Washing the Vehicle" under *Exterior Care* ⇨ *263*.

Ride Control System Messages

STABILITRAK COMPETITIVE MODE

This message displays when the Competitive Driving Mode is selected. The instrument cluster light will be on when the Competitive Driving Mode is selected. Launch Control is available when this mode is selected. The Traction Control System (TCS) will not be operating while in the Competitive Driving Mode. Adjust your driving accordingly. See *Competitive Driving Mode* ⇨ *188*, including the “Launch Control” information.

MAXIMUM SPEED 129 km/h (80 MPH)

This message displays when a malfunction is present in the Magnetic Ride Control system, if equipped. The vehicle speed will be limited to a value determined by the vehicle when the shock absorber system has failed and the shocks are in their full soft mode. Have the vehicle serviced by your dealer as soon as possible.

To acknowledge the message, press the SEL button. The message reappears every 10 minutes until this condition changes.

SERVICE STABILITRAK

This message displays if there is a problem with the StabiliTrak system and the vehicle needs service. The Traction Control System (TCS)/ StabiliTrak light on the instrument cluster also turns on and a sound will be heard. See your dealer. When this message is displayed, the system is not working. Adjust

your driving accordingly. See *Traction Control/Electronic Stability Control* ⇨ *182*.

SERVICE TRACTION SYSTEM

If this message displays when you are driving, there is a problem with the Traction Control System (TCS) and the vehicle needs service. See your dealer. When this message is displayed, the system will not limit wheel spin. Adjust your driving accordingly.

The TCS/StabiliTrak light on the instrument cluster will also turn on and a sound will be heard.

When this message is displayed, the computer controlled systems will not assist the driver in controlling the vehicle. Have the system repaired by your dealer as soon as possible. Adjust your driving accordingly. See *Traction Control/ Electronic Stability Control* ⇨ *182*.

To acknowledge the message, press SEL.

SERVICE SUSPENSION

This message displays when a malfunction is present in the Magnetic Ride Control system, if equipped, which is causing the shocks to be in their full soft mode. This is a warning to the driver that the vehicle handling may be affected. Have the vehicle serviced by your dealer as soon as possible.

To acknowledge the message, press SEL. The message reappears every 10 minutes until this condition changes.

Airbag System Messages

SERVICE AIRBAG

This message displays if there is a problem with the airbag system. See your retailer for service.

Security Messages

THEFT ATTEMPTED

This message displays if the vehicle detects a tamper condition.

Service Vehicle Messages

PROGRAM CLUSTER

This message is displayed if there is a problem with the instrument cluster. Take the vehicle to your dealer for service.

SERVICE POWER STEERING

This message displays and a chime may sound when there may be a problem with the power steering system. If this message displays and a reduction in steering performance or loss of power steering assistance is noticed, see your retailer.

SERVICE VEHICLE SOON

This message is displayed if there is a problem with the vehicle. Take the vehicle to your dealer for service.

Steering System Messages

ACTION REQUIRED TURN STEERING WHEEL START VEHICLE AGAIN

This message displays to indicate that the steering column lock device was unable to unlock the column, and the engine did not start. If this happens, immediately turn the steering wheel from side to side. If that does not unlock the steering column, turn the ignition off, and then open the driver door. Then turn the vehicle back on and turn the steering wheel from side to side for about 15 seconds. The steering column must be turned to each side immediately after pressing ENGINE START/STOP to help the steering column lock device unlock the column. In some situations it may take significant force. This situation may be avoided by straightening the front wheels before turning off the engine.

SERVICE STEERING COLUMN LOCK

This message displays when a problem with the steering column lock device has been detected. See your retailer for service.

STEERING COLUMN LOCKED

This message displays when the steering column is locked with the engine running. It is normal for the steering column to be locked during a remote start. The steering column should unlock after the brake pedal and ENGINE START/STOP are pressed.

Starting the Vehicle Messages

PRESS BRAKE TO START

This message is displayed when attempting to start an automatic transmission equipped vehicle without first pressing the brake pedal.

PRESS CLUTCH TO START

This message is displayed when attempting to start a manual gearbox equipped vehicle without first pressing the clutch pedal.

SERVICE KEYLESS START SYSTEM

This message is displayed if there is a problem with the pushbutton start system. Take the vehicle to your dealer for service.

Tyre Messages

SERVICE TYRE MONITOR SYSTEM

This message displays if there is a problem with the Tyre Pressure Monitor System (TPMS). See *Tyre Pressure Monitor Operation* ⇨ *241*.

TYRE LEARNING ACTIVE

This message displays when the system is learning new tyres. See *Tyre Pressure Monitor Operation* ⇨ *241*.

TYRE PRESSURE LOW ADD AIR TO TYRE

This message displays when the pressure in one or more of the tyres is low.

This message also displays LEFT FRONT, RIGHT FRONT, LEFT REAR, or RIGHT REAR to indicate the location of the low tyre.

The low tyre pressure warning light will also come on. See *Tyre Pressure Light* ⇨ *113*.

If a tyre pressure message appears on the DIC, stop as soon as possible. Inflate the tyres by adding air until the tyre pressure is equal to the values shown on the Tyre and Loading Information label. See *Tyres* ⇨ *235*, *Vehicle Load Limits* ⇨ *164*, and *Tyre Pressure* ⇨ *239*.

More than one tyre pressure message can appear at a time. The DIC also shows the tire pressure values. See *Driver Information Centre (DIC)* ⇨ *116*.

Transmission Messages

MANUAL GEARBOX — RELEASE CLUTCH PEDAL

This message displays and a chime sounds if the manual gearbox clutch pedal is partially applied for an extended period of time while the vehicle is being driven. Driving with the clutch pedal applied can reduce the life of the clutch. Fully release the clutch pedal after each gear change.

AUTOMATIC TRANSMISSION PERFORMANCE SHIFT ACTIVE

This message may display when the vehicle is in Sport or Track Mode.

REDUCED PERFORMANCE — REDUCE CLUTCH USE

This message displays and engine torque is momentarily limited if excessive manual gearbox clutch slip is detected while the clutch pedal is fully released. Reduce clutch slip during acceleration from a stop and during gear changes to allow the clutch to cool. This should prevent further slips with the clutch pedal fully released. If this message displays repeatedly, see your retailer.

SERVICE TRANSMISSION

This message displays if there is a problem with the transmission. See your dealer.

SHIFT DENIED

This message displays when attempting to shift to a gear not appropriate for the vehicle speed and engine revolutions per minute (rpm).

SHIFT TO PARK

This message displays when the transmission needs to be shifted to P (Park). This may appear when attempting to remove the key from the vehicle if the vehicle is not in P (Park).

TRANSMISSION HOT — IDLE ENGINE

This message displays and a chime sounds if the transmission fluid in the vehicle gets hot. Driving with the

automatic transmission fluid temperature high can cause damage to the vehicle. Stop the vehicle and let it idle to allow the transmission to cool. This message clears when the fluid temperature reaches a safe level.

If this message is displayed during normal vehicle operation on flat roads, the vehicle may need service. See your retailer for an inspection.

TRANSMISSION HOT — SLOW DOWN

This message displays and a chime sounds if the manual gearbox fluid is hot and if the vehicle speed is high. Driving with the manual gearbox fluid temperature high can cause damage to the vehicle. Drive at a slower speed to cool the manual gearbox fluid. This message clears when the vehicle has slowed sufficiently or if the manual gearbox fluid has cooled sufficiently.

Vehicle Reminder Messages

ICE POSSIBLE DRIVE WITH CARE

This message is displayed when ice conditions are possible.

TURN WIPER CONTROL TO INTERMITTENT FIRST

This message is displayed when attempting to adjust the intermittent wiper speed without intermittent selected on the wiper control. See *Windscreen Wiper/Washer* ⇨ *95*.

Vehicle Speed Messages

SPEED LIMIT EXCEEDED

This message is displayed when the vehicle speed is greater than the speed warning speed. See "Speed Warning" under *Instrument Cluster* ⇨ *99*.

SPEED LIMIT SET TO XXX

This message is displayed when the speed warning is set. See "Speed Warning" under *Instrument Cluster* ⇨ *99*.

Window Messages

OPEN, THEN CLOSE DRIVER/ PASSENGER WINDOW

This message is displayed when the window needs to be reprogrammed. If the vehicle's battery has been discharged or disconnected, you may need to program each front window for the express-up feature to work. See *Power Windows* ⇨ *42*.

Vehicle Personalisation

Use the audio system controls to access the personalisation menus for customising vehicle features.

The following are all possible personalisation features. Depending on the vehicle, some may not be available.

Audio System Controls

1. Press the desired feature to display a list of available options.
2. Press to select the desired feature setting.
3. Press < BACK on the faceplate or the ⬅ screen button to return to the previous menu or exit.

Turn the vehicle to ON/RUN to access the Settings menu, then select SETTINGS from the Home Page on the infotainment system display.

Personalisation Menus

The following list of menu items may be available:

- Time and Date
- Driving Mode
- Language (Language)
- Radio
- Vehicle
- Bluetooth
- Apple CarPlay
- Android Auto
- USB Auto Launch
- Voice
- Display
- Rear Camera
- Return to Factory Settings
- Software Information

Detailed information for each menu follows.

Time and Date

Manually set the time and date. See *Clock* ⇨ *96*.

Driving Mode

Select and the following may display:

- Engine Sound Management

Engine Sound Management

Select Engine Sound Management, then choose from the available options. See *Driver Mode Control* ⇨ *184*.

Language (Language)

Select Language, then select from the available language(s).

The selected language will display on the system, and voice recognition will reflect the selected language.

Radio

Press and the following may display:

- Manage Favourites
- Number of Favourites Shown
- Audible Touch Feedback
- Auto Volume
- Maximum Start-Up Volume

- Audio Cue Volume

Manage Favourites

This allows favourites to be edited. See “Manage Favourites” in “Settings” under “Radio” in the infotainment manual.

Number of Favourites Shown

Press to set the number of favourites to display.

Select the desired number or select Auto and the infotainment system will automatically adjust the number of favourites shown.

Audible Touch Feedback

This allows Audible Touch Feedback to be turned on or off.

Select Off or On.

Auto Volume

This feature adjusts the volume based on vehicle speed and ambient noise.

Select Off, Low, Medium-Low, Medium, Medium-High, or High.

Maximum Start-Up Volume

This feature sets the maximum startup volume. If the vehicle is started and the volume is greater than this level, the volume is adjusted to this level. To set the maximum start-up volume, touch + or − to increase or decrease.

Audio Cue Volume

This feature sets the volume of audio files played at system start-up and shut-down.

Select On, then press + or − to increase or decrease the volume.

Vehicle

Select and the following may display:

- Climate and Air Quality
- Collision/Detection Systems
- Comfort and Convenience
- Lighting
- Power Door Locks
- Remote Lock, Unlock, Start

Climate and Air Quality

Select and the following may display:

- Auto Fan Max Speed
- Remote Start Auto Heat Seats
- Auto Demist
- Auto Rear Demist

Auto Fan Max Speed

This feature will set the maximum auto fan speed.

Select Low, Medium, or High.

Remote Start Auto Heat Seats

When on, this feature will turn the heated seats on when using remote start on cold days.

Select On or Off.

Auto Demist

When turned on and high humidity is detected, the climate control system may adjust to outside air supply and turn on the air conditioner or the heater. The fan speed may slightly increase to help prevent misting up. When high

humidity is no longer detected, the system will return to its prior operation.

Select On or Off.

Auto Rear Demist

When on, this feature turns on the rear demister at vehicle start when the interior temperature is cold and mist is likely. The auto rear demist function can be disabled by pressing . When off, the feature can be turned on by pressing . See "Rear Window Demister" under *Automatic Climate Control System* ⇨ *146* or *Dual Automatic Climate Control System* ⇨ *149*.

Select On or Off.

Collision/Detection Systems

Select and the following may display:

- Alert Type
- Park Assist
- Side Blind Zone Alert
- Rear Cross Traffic Alert

Alert Type

This feature will set crash alerts to beeps or seat vibrations. This setting affects all crash alerts including Forward Collision, Lane Departure Warning, and Park Assist alerts.

Select Beeps or Safety Alert Seat.

Park Assist

If equipped, this feature can assist in reversing and parking the vehicle. See *Assistance Systems for Parking or Reversing* ⇨ *193*.

Select On or Off.

Side Blind Zone Alert

This allows the Side Blind Zone Alert feature to be turned on or off. See *Side Blind Zone Alert (SBZA)* ⇨ *195*.

Select On or Off.

Rear Cross Traffic Alert

This allows the Rear Cross Traffic Alert feature to be turned on or off. Select On or Off. See "Rear Cross Traffic Alert" in *Assistance Systems for Parking or Reversing* ⇨ *193*.

Comfort and Convenience

Select and the following may display:

- Auto Memory Recall
- Easy Exit Options
- Chime Volume
- Reverse Tilt Mirror

Auto Memory Recall

This feature automatically recalls the current driver's previously stored 1 or 2 button positions when entering the vehicle. See *Memory Seats* ⇨ *54*.

Select Off or On.

Easy Exit Options

This feature automatically recalls the current driver's previously stored exit button position when exiting the vehicle. See *Memory Seats* ⇨ *54*.

Select Off or On.

Chime Volume

This allows the selection of the chime volume level.

Touch + or − to adjust the volume, or select Normal or High.

Reverse Tilt Mirror

When on, both the driver and passenger outside mirrors will tilt downward when the vehicle is shifted to R (Reverse) to improve visibility of the ground near the rear wheels. They will return to their previous driving position when the vehicle is shifted out of R (Reverse) or the engine is turned off. See *Reverse Tilt Mirrors* ⇨ *40*.

Select Off, On - Driver and Passenger, On - Driver, or On - Passenger.

Lighting

Select and the following may display:

- Vehicle Locator Lights
- Exit Lighting

Vehicle Locator Lights

This feature will flash the exterior lamps and allows some of the exterior lamps and most of the interior lamps to turn on briefly when on the Remote Keyless Entry (RKE) transmitter is pressed to locate the vehicle.

Select Off or On.

Exit Lighting

This allows the selection of how long the exterior lamps stay on when leaving the vehicle when it is dark outside.

Select Off, 30 Seconds, 60 Seconds, or 120 Seconds.

Power Door Locks

Select and the following may display:

- Unlocked Door Anti Lock Out
- Auto Door Lock
- Delayed Door Lock

Unlocked Door Anti Lock Out

When on, this feature will keep the driver door from locking until the door is closed. If this feature is turned on, the Delayed Door Lock menu will not be available.

Select Off or On.

Auto Door Lock

When this feature is turned on, all doors will automatically lock when the vehicle is shifted out of P (Park) for an automatic transmission, or when the vehicle speed is above 13 km/h (8 mph) for a manual transmission. The doors will automatically unlock when the vehicle is shifted into P (Park) for an automatic transmission, or when the vehicle is turned off for a manual transmission.

Select Off or On.

Delayed Door Lock

When on, this feature will delay the locking of the doors. To override the delay, press the power door lock switch on the door.

Select Off or On.

Remote Lock, Unlock, Start

Select and the following may display:

- Remote Unlock Light Feedback
- Remote Door Unlock
- Remote Start Auto Cool Seats
- Remote Start Auto Heat Seats
- Remote Window Operation
- Passive Door Unlock
- Passive Door Lock
- Remote Left in Vehicle Alert

Remote Unlock Light Feedback

When on, the exterior lamps will flash when unlocking the vehicle with the RKE transmitter.

Select Off or Flash Lights.

Remote Door Unlock

This allows selection of which doors will unlock when pressing on the RKE transmitter.

Select All Doors or Driver Door.

Remote Start Auto Cool Seats

If equipped and turned on, this feature will turn on the ventilated seats when using remote start on warm days.

Select Off or On.

Remote Start Auto Heat Seats

If equipped and turned on, this feature will turn on the heated seats when using remote start on cold days.

Select Off or On.

Remote Window Operation

This allows the windows to be opened when pressing on the RKE transmitter. See *Remote Keyless Entry (RKE) System Operation* ⇨ *24*.

Select Off or On.

Passive Door Unlock

This allows the selection of what doors will unlock when using the button on the driver door to unlock the vehicle.

Select All Doors or Driver Door.

Passive Door Lock

This feature can be turned on or off, or can be used to select feedback. See *Remote Keyless Entry (RKE) System Operation* ⇨ *24*.

Select Off, On with Horn Chirp, or On.

Remote Left in Vehicle Alert

This feature sounds an alert when the RKE transmitter is left in the vehicle. This menu also enables Remote No Longer in Vehicle Alert. See *Remote Keyless Entry (RKE) System Operation* ⇨ *24*.

Select Off or On.

Bluetooth

Select and the following may display:

- Pair New Device
- Discoverable
- Device Management
- Ringtones
- Voice Mail Numbers
- Text Message Alerts

Pair New Device

Select to pair a new device. See "Pairing" in "Bluetooth (Infotainment Controls)" in the infotainment manual.

Discoverable

This allows the system find a device.

Select Off or On.

Device Management

Select to connect to a different phone source, disconnect a phone, or delete a phone.

Ringtones

Press to change the ring tone for the specific phone. The phone does not need to be connected to change the ring tones.

Voice Mail Numbers

This feature displays the voice mail number for all connected phones. To change the voice mail number, select EDIT or press the EDIT button. Type a new number, then select SAVE or press the SAVE button.

Text Message Alerts

This allows the feature to be turned on or off.

Select Off or On.

Apple CarPlay

Select and the following may display:

- Apple CarPlay
- Manage Apple CarPlay Devices

Apple CarPlay

This feature allows Apple devices to be connected to the infotainment system through a USB port.

Select Off or On.

Manage Apple CarPlay Devices

Select to manage Apple devices. Apple CarPlay must be on for this feature to be accessed.

Android Auto

Select and the following may display:

- Android Auto
- Manage Android Auto Devices

Android Auto

Select to turn this feature off or on.

Select Off or On.

Manage Android Auto Devices

Select to manage Android devices. Android Auto must be on for this feature to be accessed.

USB Auto Launch

This allows Android and Apple CarPlay devices to automatically connect when plugged into the USB port.

Select Off or On.

Voice

Select and the following may display:

- Prompt Length
- Audio Feedback Speed

Prompt Length

This feature adjusts the voice prompt length.

Select Short or Long.

Audio Feedback Speed

This feature adjusts the audio feedback speed.

Select Slow, Medium, or Fast.

Display

Select and the following may display:

- Calibrate Touchscreen
- Turn Display Off

Calibrate Touchscreen

Select to calibrate the touchscreen, then follow the prompts.

Turn Display Off

Select to turn the display off. Press anywhere on the display area or any faceplate button to turn the display on.

Rear Camera

Select and the following may display:

- Guidance Lines
- Rear Park Assist Symbols

Guidance Lines

Select to turn Off or On. See *Assistance Systems for Parking or Reversing* ⇨ *193*.

Rear Park Assist Symbols

Select to turn Off or On. See *Assistance Systems for Parking or Reversing* ⇨ *193*.

Return to Factory Settings

Select and the following may display:

- Restore Vehicle Settings
- Clear All Private Data
- Restore Radio Settings

Restore Vehicle Settings

This allows selection of restoring vehicle settings.

Select Restore or Cancel.

Clear All Private Data

This allows selection to clear all private information from the vehicle.

Select Delete or Cancel.

Restore Radio Settings

This allows selection to restore radio settings.

Select Restore or Cancel.

Software Information

Select to view the infotainment system current software information.

Lighting

Exterior Lighting
Exterior Lamp Controls 138
Headlamp Main/Dipped-Beam Changer 139
Flash-to-Pass 139
Daytime Running Lamps (DRL) 139
Automatic Headlamp System 139
Headlamp Levelling Control 140
Hazard Warning Flashers 141
Indicator and Lane-Change Signals 141
Fog Lamps 141
Position Lamps 142

Interior Lighting
Instrument Panel Illumination Control 142
Interior Lamps 142
Reading Lamps 143

Lighting Features
Entry Lighting 143
Exit Lighting 143
Theatre Dimming 143
Battery Load Management ... 144
Battery Power Protection 144
Exterior Lighting Battery Saver 144

Exterior Lighting

Exterior Lamp Controls

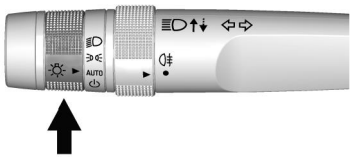

The exterior lamp control is on the instrument panel, on the outboard side of the steering wheel.

There are four positions:

⏻ : Briefly turn to this position to turn the automatic light control off or on again. When released, the control returns to the AUTO position.

AUTO : Automatically turns the exterior lamps on and off, depending on outside lighting.

: Turns on the parking lamps including all lamps, except the headlamps.

: Turns on the headlamps together with the parking lamps and instrument panel lights.

A warning chime sounds if the driver door is opened when the ignition switch is off and the headlights or parking lights are on.

: Press to turn the rear fog lamps on or off.

See *Fog Lamps* ⇨ *141*.

Headlamp Main/ Dipped-Beam Changer

Push the indicator lever away from you and release to turn the main beams on. To return to dipped beams, push the stalk again or pull it toward you and release.



This indicator light turns on in the instrument cluster when the high-beam headlamps are on.

Flash-to-Pass

The flash-to-pass feature works with the low beams or Daytime Running Lamps (DRL) on or off.

To flash the main beams, pull the indicator lever all the way toward you, then release it.

Daytime Running Lamps (DRL)

DRL can make it easier for others to see the front of your vehicle during the day.

A light sensor on top of the instrument panel makes the DRL work, so be sure it is not covered.

The dedicated DRL will come on when all of the following conditions are met:

- The ignition is in the ON/RUN position.
- The exterior lamps control is in AUTO, or has been briefly turned to to turn the automatic light control on again.
- The engine is running and the transmission is not in P (Park).

When the DRL are on, the headlights, tail lights, sidemarker lamps, instrument panel lights, and other lamps will not be on.

The headlamps automatically change from DRL to the regular headlamps depending on the darkness of the surroundings. The other lamps that come on with the headlamps will also come on.

When it is bright enough outside, the headlamps will switch off and the DRL will come on.

To turn the DRL off turn the exterior lamps control to . To turn the DRL back on turn the control to .

The regular headlamp system should be turned on when needed.

Automatic Headlamp System

When it is dark enough outside and the headlight switch is in AUTO, the automatic headlight system will turn on the headlights at the normal

brightness along with other lamps such as the tail lights, sidemarker lamps, parking lights, number plate lamps, and the instrument panel lights. The radio lights will also be dim.

To turn off the automatic headlight system, turn the exterior lamps switch to the ⏻ position and then release.

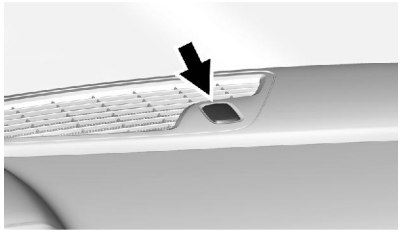

The vehicle has a light sensor on the top of the instrument panel. Do not cover this sensor, otherwise the system will come on whenever the ignition is on.

The system may also turn on the headlamps when driving through a parking garage, heavy overcast weather, or a tunnel. This is normal.

There is a delay in the transition between the daytime and night-time operation of the Daytime Running Lamps (DRL) and the automatic headlight system so that driving under bridges or bright overhead street lights does not affect the system. The DRL and automatic headlamp system will only be affected when the light sensor sees a change in lighting lasting longer than the delay.

If the vehicle is started in a dark garage, the automatic headlamp system comes on immediately. If it is light outside when the vehicle leaves the garage, there will be a slight delay before the automatic headlamp system changes to the DRL. During that delay, the instrument cluster may not be as bright as usual. Make sure the instrument panel brightness control is in the full bright position. See *Instrument Panel Illumination Control* ⇨ *142*.

Lights On with Wipers

If the windscreen wipers are activated in daylight with the engine on, and the exterior lamp control is in AUTO, the headlights, parking lights, and other exterior lamps come on. The transition time for the lamps coming on varies based on wiper speed. When the wipers are not operating, these lamps turn off. Move the exterior lamp control to ⏻ or ≡00≡ to disable this feature.

Headlamp Levelling Control

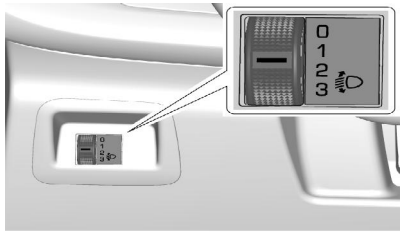

The manual headlamp levelling control is on the outboard side of the steering column. This feature lets the headlamp level be adjusted

to suit the vehicle load. Correct adjustment of the headlamp level can reduce the glare for other drivers.

The low-beam headlamps must be on to adjust the headlamp levelling.

: Move the thumbwheel up or down to adjust the headlamps.

- 0 = Front seat occupied.
- 1 = All seats occupied.
- 2 = All seats occupied and load in the luggage compartment.
- 3 = Driver seat occupied and load in the luggage compartment.

Hazard Warning Flashers

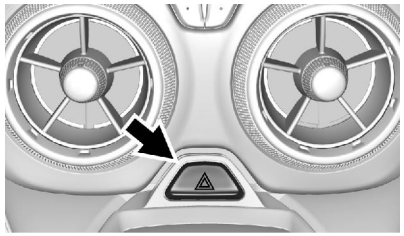

: Press to make the front and rear turn signal lamps flash on and off. This warns others that you are having trouble. Press again to turn the flashers off.

Indicator and Lane-Change Signals

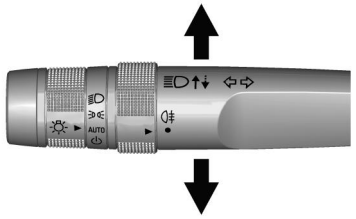

Move the lever all the way up or down to signal a turn.

An arrow on the instrument cluster flashes in the direction of the turn or lane change.

Raise or lower the lever until the arrow starts to flash to signal a lane change. Hold it there until the lane change is completed. If the lever is briefly pressed and released, the indicator flashes three times.

The stalk returns to its starting position whenever it is released.

If after signalling a turn or lane change the arrow flashes rapidly or does not come on, a signal bulb may be burned out.

Have any burned out bulbs replaced. If a bulb is not burned out, check the fuse. See *Electrical System Overload* ⇨ *228*.

Fog Lamps

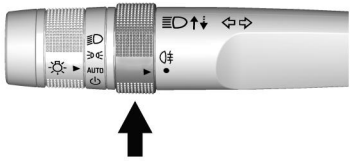

The rear fog lamp control is on the indicator lever.

The ignition and the headlamps must be on to turn the rear fog lamps on.

: To turn the rear fog lamps on or off, turn the rear fog lamp band on the lever to and release it. The band will return to its original position.

Position Lamps

One-Sided Parking Lamps

When the vehicle is turned off, placing the turn signal lever in the right or left turn position will cause the parking lamps on the corresponding side to illuminate. A chime will sound and the corresponding turn signal light on the instrument panel will illuminate for a short time. The left or right turn signal lamps will remain illuminated until the vehicle power is no longer off or the turn signal lever is returned to the neutral position.

Interior Lighting

Instrument Panel Illumination Control

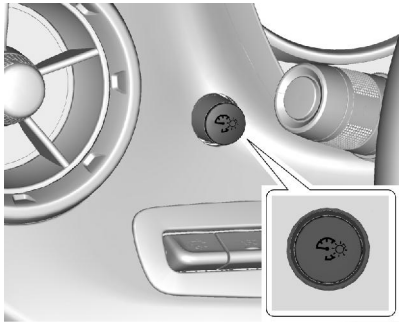

The knob for this feature is on the left side of the instrument panel.

Turn the knob clockwise or anti-clockwise to brighten or dim the instrument panel lights at night. Turn the knob completely clockwise to turn on the interior lights.

Interior Lamps

Interior Spectrum Lighting

If equipped, this feature allows for choosing the colour of the interior lighting in the vehicle.

To access, press on the faceplate, then touch LIGHTING to display the settings screen.

Touch to select from the following:

OFF : Turns the feature off.

LIGHT STRIPS : Turns on standard mode. Touch the light strip colour to select a colour for the interior lighting.

SHOW MODE : When the shift lever is in P (Park) (automatic transmission) or the park brake is applied (manual transmission), touch to turn the feature on in colors chosen by the vehicle. When the shift lever is not in P (Park) or the park brake is not applied, the interior color will default to the last active color selected in light strips mode.

LINK TO DRIVE MODE : The light colour is matched to the colour being used for the drive mode.

Reading Lamps

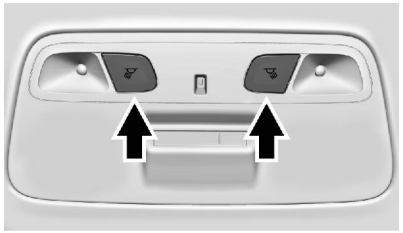

The reading lamps are in the overhead console. The lamps go on when a door is opened. When the doors are closed, press or to turn on each lamp.

Lighting Features

Entry Lighting

Some exterior lamps and interior lamps turn on briefly at night, or in areas with limited lighting, when is pressed on the Remote Keyless Entry (RKE) transmitter. When a door is opened, the interior lamps come on. They stay on for about 20 seconds. When all of the doors have been closed or the ignition is turned to ON/RUN, they gradually fade out.

This feature can be changed. See "Vehicle Locator Lights" under *Vehicle Personalisation ⇨ 131*.

Exit Lighting

The headlamps, tail lamps, parking lamps, outside mirror lamps, and number plate lamps come on when the following is performed:

1. Remove the key from the ignition.
2. Open the driver door.
3. Pull the indicator lever and release.
4. Close the driver door.

The exit lighting turns off immediately if the indicator lever is pulled again with the driver door open.

The dome lamp comes on after the ignition is changed to the OFF position. The exterior lamps and interior light remain on for a set amount of time, then automatically turn off.

The exterior lamps turn off immediately by turning the exterior lamp control off.

This feature can be changed. See *Vehicle Personalisation ⇨ 131*.

Theatre Dimming

This feature allows for a three to five second fade out of the interior lamps instead of having them turn off immediately.

Battery Load Management

The vehicle has Electric Power Management (EPM) that estimates the battery's temperature and state of charge. It then adjusts the voltage for best performance and extended life of the battery.

When the battery's state of charge is low, the voltage is raised slightly to quickly bring the charge back up. When the state of charge is high, the voltage is lowered slightly to prevent overcharging. If the vehicle has a voltmeter gauge or a voltage display on the Driver Information Centre (DIC), you may see the voltage move up or down. This is normal. If there is a problem, an alert will be displayed.

The battery can be discharged at idle if the electrical loads are very high. This is true for all vehicles. This is because the generator (alternator) may not be spinning fast enough at idle to produce all of the power needed for very high electrical loads.

A high electrical load occurs when several of the following are on, such as: headlamps, main beams, rear window demister, climate control fan at high speed, heated seats, engine cooling fans, trailer loads, and loads plugged into accessory power outlets.

EPM works to prevent excessive discharge of the battery. It does this by balancing the generator's output and the vehicle's electrical needs. It can increase engine idle speed to generate more power whenever needed. It can temporarily reduce the power demands of some accessories.

Normally, these actions occur in steps or levels, without being noticeable. In rare cases at the highest levels of corrective action, this action may be noticeable to the driver. If so, a DIC battery voltage and charging message displays, it is recommended that the driver reduce the electrical loads as much as possible. See *Battery Voltage and Charging Messages* ⇨ *121* and *Driver Information Centre (DIC)* ⇨ *116*.

Battery Power Protection

This feature shuts off the interior lights if they are left on for more than 10 minutes when the ignition is in OFF. This helps to prevent the battery from running down.

Exterior Lighting Battery Saver

The exterior lamps turn off about 10 minutes after the ignition is turned off, if the parking lamps or headlamps have been manually left on. This protects against draining the battery. To restart the 10-minute timer, turn the exterior lamp control to the off position and then back to the parking lamp or headlamp position.

To keep the lamps on for more than 10 minutes, the ignition must be in the ACC/ACCESSORY or ON/RUN position.

Chevrolet Camaro Owner Manual (GMNA-Localizing-Europe-10293385) -
2017 - crc - 5/24/16

Infotainment System

Introduction
Infotainment 145

Introduction

Infotainment

See the infotainment manual for information on the radio and available features.

Climate Controls

Climate Control Systems
Automatic Climate Control System 146
Dual Automatic Climate Control System 149

Air Vents
Air Vents 152

Maintenance
Passenger Compartment Air Filter 152
Service 152

Climate Control Systems

Automatic Climate Control System

The heating, cooling, defrosting, and ventilation for the vehicle can be controlled with this system.

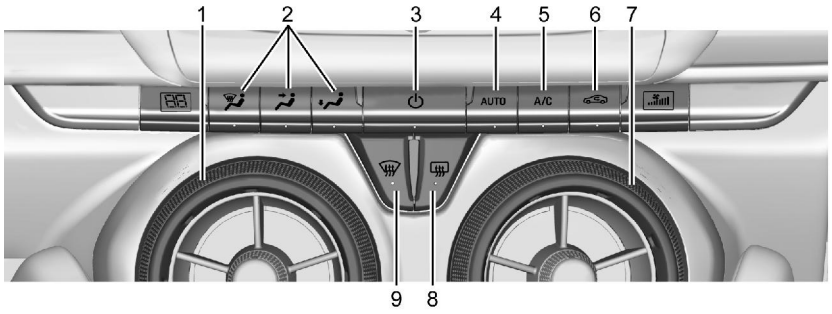

1. Temperature Control
2. Air Delivery Mode Controls
3. ⏻ (Power)
4. AUTO (Automatic Operation)
5. A/C (Air Conditioning)
6. Recirculation
7. Fan Control
8. Rear Window Demister
9. Defrost

Automatic Operation

The system automatically controls the fan speed, air delivery, air conditioning, and recirculation in order to heat or cool the vehicle to the desired temperature:

When AUTO is lit, all four functions operate automatically. Each function can also be manually set and the setting is displayed. Functions not manually set will continue to be automatically controlled, even if the AUTO indicator is not lit.

For automatic operation:

1. Press AUTO.
2. Set the temperature. Allow the system time to stabilise. Adjust the temperature as needed for best comfort.

⏻ : Press to turn the fan off or on.

Temperature Control : Turn the outer ring of the air vent clockwise or anticlockwise to increase or decrease the temperature setting.

Fan Control : Turn the outer ring of the air vent clockwise or anticlockwise to increase or decrease the fan speed.

Air Delivery Mode Controls :

Press , , or to change the direction of the airflow. Any combination of the three buttons can be selected. The indicator light in the button will turn on. The current mode appears in the display screen. Pressing any of the three buttons cancels automatic air delivery control and the direction of the airflow is controlled manually. Press AUTO to return to automatic operation.

To change the current mode, select one or more of the following:

: Clears the windows of mist or moisture. Air is directed to the windshield and side window outlets.

: Air is directed to the instrument panel outlets.

: Air is directed to the floor outlets.

: Clears the windscreen of mist or frost more quickly. Air is only directed to the windscreen and side window outlets. The air conditioning may turn on automatically to remove mist.

For best results, clear all snow and ice from the windscreen before defrosting.

Do not drive the vehicle until all windows are clear.

Air Conditioning

A/C : Press to turn the air conditioning on or off. An indicator light turns on. If the fan is turned off or the outside temperature falls below freezing, the air conditioning will not run, but the indicator light will be lit.

The air conditioning might automatically come on when is selected.

: Press to turn on recirculation. An indicator light comes on. Air is recirculated inside the vehicle.

It helps to quickly cool the air inside the vehicle or reduce the outside air and odours that may enter.

Operation in the recirculation mode while the air conditioner is off increases humidity and may cause the windows to mist.

Recirculation is not available in the defrost or demist modes.

To improve fuel efficiency and to cool the vehicle faster, recirculation may be automatically selected in warm weather. The recirculation light will not come on. Press to select recirculation; press it again to select outside air.

Rear Window Demister

: Press to turn the rear window demister on or off. An indicator light on the button comes on to show that the rear window demister is on. The demister turns off if the ignition is turned to ACC/ACCESSORY or OFF.

The rear window demister can be set to automatic operation. See "Climate and Air Quality" under *Vehicle Personalisation* ⇨ *131*. When Auto Rear Demist is selected, the rear window demister turns on automatically when the interior temperature is cold and the outside temperature is about 7 °C (44 °F) and below.

The heated outside rearview mirrors turn on when the rear window demister button is on and help to clear mist or frost from the surface of the mirrors.

Do not drive the vehicle until all windows are clear.

Caution

Do not use a razor blade or sharp object to clear the inside rear window. Do not adhere anything to the demister grid lines in the rear glass. These actions may damage the rear demister. Repairs would not be covered by the vehicle warranty.

Remote Start Climate Control Operation, If Equipped : The climate control system may run when the vehicle is started remotely. See *Remote Vehicle Start* ⇨ *29*. The system uses the driver's previous settings to heat or cool the inside of the vehicle. The rear demist may come on during remote start based on cold ambient conditions. The rear demist indicator light does not come on during a remote start. When enabled, the front heated seats, if equipped, will turn on automatically if it is cold outside. See *Vehicle Personalisation* ⇨ *131*. The heated seat indicator lights do not come on during a remote start.

Dual Automatic Climate Control System

The heating, cooling, defrosting, and ventilation for the vehicle can be controlled with this system.

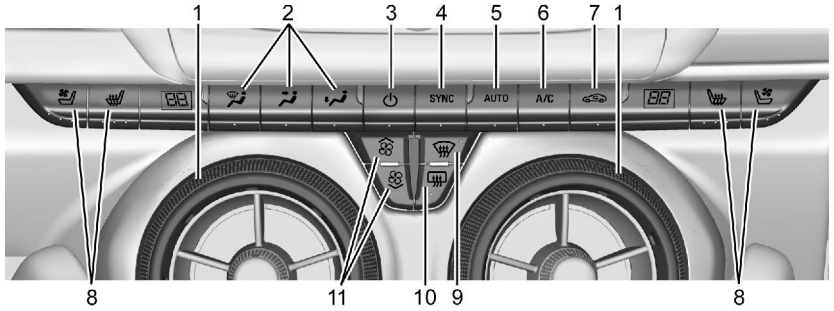

1. Driver and Passenger Temperature Controls
2. Air Delivery Mode Controls
3. ⏻ (Power)
4. SYNC (Synchronised Temperature)
5. AUTO (Automatic Operation)
6. A/C (Air Conditioning)
7. Recirculation
8. Driver and Passenger Heated and Ventilated Seats (If Equipped)
9. Defrost
10. Rear Window Demister
11. Fan Control

Automatic Operation

The system automatically controls the fan speed, air delivery, air conditioning, and recirculation in order to heat or cool the vehicle to the desired temperature:

When AUTO is lit, all four functions operate automatically. Each function can also be manually set and the setting is displayed. Functions not manually set will continue to be automatically controlled, even if the AUTO indicator is not lit.

For automatic operation:

1. Press AUTO.
2. Set the temperature. Allow the system time to stabilise. Adjust the temperature as needed for best comfort.

Driver and Passenger Temperature Controls : The temperature can be adjusted separately for the driver and the passenger. Turn the outer ring of the air vents clockwise or anticlockwise to increase or decrease the driver or

passenger temperature setting. The setting will appear on the temperature display.

SYNC : Press to link the passenger climate temperature settings to the driver setting. The SYNC indicator light will turn on. When the passenger settings are adjusted, the SYNC indicator light turns off.

Manual Operation

⏻ **:** Press to turn the fan off or on.

or : Press to increase or decrease the fan speed.

Air Delivery Mode Controls :
Press , , or to change the direction of the airflow. Any combination of the three buttons can be selected. The indicator light in the button will turn on. The current mode appears in the display screen. Pressing any of the three buttons cancels automatic air delivery control and the direction of the airflow is controlled manually. Press AUTO to return to automatic operation.

To change the current mode, select one or more of the following:

: Clears the windows of mist or moisture. Air is directed to the windshield and side window outlets.

: Air is directed to the instrument panel outlets.

: Air is directed to the floor outlets.

: Clears the windscreen of mist or frost more quickly. Air is only directed to the windscreen and side window outlets. The air conditioning may turn on automatically to remove mist.

For best results, clear all snow and ice from the windscreen before defrosting.

Do not drive the vehicle until all windows are clear.

Air Conditioning

A/C : Press to turn the air conditioning on or off. An indicator light turns on. If the fan is turned off or the outside temperature falls below freezing, the air conditioning will not run, but the indicator light will be lit.

The air conditioning might automatically come on when is selected.

: Press to turn on recirculation. An indicator light comes on. Air is recirculated inside the vehicle. It helps to quickly cool the air inside the vehicle or reduce the outside air and odours that may enter.

Operation in the recirculation mode while the air conditioner is off increases humidity and may cause the windows to mist.

Recirculation is not available in the defrost or demist modes.

To improve fuel efficiency and to cool the vehicle faster, recirculation may be automatically selected in warm weather. The recirculation light will not come on. Press to select recirculation; press it again to select outside air.

Rear Window Demister

: Press to turn the rear window demister on or off. An indicator light on the button comes on to show that the rear window demister is on. The demister turns off if the ignition is turned to ACC/ACCESSORY or OFF.

The rear window demister can be set to automatic operation. See "Climate and Air Quality" under *Vehicle Personalisation* ⇨ *131*. When Auto Rear Demist is selected, the rear window demister turns on automatically when the interior temperature is cold and the outside temperature is about 7 °C (44 °F) and below.

The heated outside rearview mirrors turn on when the rear window demister button is on and help to clear mist or frost from the surface of the mirrors.

Do not drive the vehicle until all windows are clear.

Caution

Do not use a razor blade or sharp object to clear the inside rear window. Do not adhere anything to the demister grid lines in the rear glass. These actions may damage the rear demister. Repairs would not be covered by the vehicle warranty.

or (If Equipped) : Press or to heat the driver or passenger seat.

Press or , if equipped, to ventilate the driver or passenger seat. See *Heated and Ventilated Front Seats* ⇨ *56*.

Remote Start Climate Control Operation, If Equipped : The climate control system may run when the vehicle is started remotely. See *Remote Vehicle Start* ⇨ *29*. The system uses the driver's previous settings to heat or cool the inside of the vehicle. The rear demist may come on during remote start based on cold ambient conditions. The rear demist indicator light does not come on during a remote start. When enabled, the front heated seats, if equipped, will turn on automatically if it is cold outside. See *Vehicle Personalisation* ⇨ *131*. The heated seat indicator lights do not come on during a remote start.

Air Vents

Use the air outlets in the centre and on the side of the instrument panel to direct the airflow. Use the centre knobs on the air outlets to open or close off the airflow.

Operation Tips

- In demist or defrost mode, warm air flows from side air outlets. To improve side window demisting or defrosting, direct side air outlets toward the side windows.
- Clear away any ice, snow, or leaves from air inlets at the base of the windscreen that could block the flow of air into the vehicle.
- Keep the path under the front seats clear of objects to help circulate the air inside of the vehicle more effectively.
- Use of non-GM approved bonnet air flow deflectors can adversely affect the performance of the system. Check with your dealer before adding equipment to the outside of the vehicle.

Maintenance

Passenger Compartment Air Filter

The passenger compartment air filter removes most of the pollen and dust from the air that enters the vehicle. The filter will need to be replaced periodically. See *Scheduled Maintenance* ⇨ *270*.

Using the climate control system without an air filter is not recommended. Water or other debris could enter the system and result in leaks or noises. Always install a new filter when removing the old filter.

For more information, see your dealer.

Service

All vehicles have a label underbonnet that identifies the refrigerant used in the vehicle. The refrigerant system should only be serviced by trained and certified technicians. The air conditioning evaporator should never be repaired or replaced by one from a salvage vehicle. It should only be replaced by a new evaporator to ensure proper and safe operation.

During service, all refrigerants should be reclaimed with proper equipment. Venting refrigerants directly to the atmosphere is harmful to the environment and may also create unsafe conditions based on inhalation, combustion, frostbite, or other health-based concerns.

Driving and Operating

Driving Information
Distracted Driving 154
Defensive Driving 154
Control of a Vehicle 155
Braking 155
Steering 155
Off-Road Recovery 156
Loss of Control 156
Track Events and Competitive Driving 157
Driving on Wet Roads 161
Hill and Mountain Roads 162
If the Vehicle Is Stuck 163
Vehicle Load Limits 164

Starting and Operating
New Vehicle Run-In 165
Ignition Positions 166
Starting the Engine 168
Retained Accessory Power (RAP) 170
Shifting Into Park 170
Shifting out of Park 171
Parking 171
Parking over Things That Burn 171
Active Fuel Management® 172
Extended Parking 172

Engine Exhaust
Engine Exhaust 172
Running the Vehicle While Parked 173

Automatic Transmission
Automatic Transmission 173
Manual Mode 175

Manual Transmission
Manual Transmission 178
Active Rev Match 178

Brakes
Antilock Brake System (ABS) 179
Electric Parking Brake 180
Brake Assist 182
Hill Start Assist (HSA) 182

Ride Control Systems
Traction Control/Electronic Stability Control 182
Driver Mode Control 184
Competitive Driving Mode 188
Limited-Slip Rear Axle 190

Cruise Control
Cruise Control 190

Driver Assistance Systems
Driver Assistance Systems ... 193
Assistance Systems for Parking or Reversing 193
Side Blind Zone Alert (SBZA) 195
Lane Change Alert (LCA) 196

Fuel
Fuel 198
Fuel Additives 198
Filling the Tank 198
Filling a Portable Fuel Container 200

Trailer Towing
General Towing Information 201

Conversions and Add-Ons
Add-On Electrical Equipment 201

Driving Information

Distracted Driving

Distraction comes in many forms and can take your focus from the task of driving. Exercise good judgement and do not let other activities divert your attention away from the road. Many local governments have enacted laws regarding driver distraction. Become familiar with the local laws in your area.

To avoid distracted driving, keep your eyes on the road, keep your hands on the steering wheel, and focus your attention on driving.

- Do not use a phone in demanding driving situations. Use a hands-free method to place or receive necessary phone calls.
- Watch the road. Do not read, take notes, or look up information on phones or other electronic devices.
- Designate a front seat passenger to handle potential distractions.
- Become familiar with vehicle features before driving, such as programming favourite radio stations and adjusting climate control and seat settings. Program all trip information into any navigation device prior to driving.
- Wait until the vehicle is parked to retrieve items that have fallen to the floor.
- Stop or park the vehicle to tend to children.
- Keep pets in an appropriate carrier or restraint.
- Avoid stressful conversations while driving, whether with a passenger or on a mobile phone.

⚠ Warning

Taking your eyes off the road too long or too often could cause a crash resulting in injury or death. Focus your attention on driving.

Refer to the infotainment section for more information on using that system and the navigation system, if equipped, including pairing and using a mobile phone.

Defensive Driving

Defensive driving means “always expect the unexpected.” The first step in driving defensively is to wear the safety belt. See *Seat Belts* ⇨ *58*.

- Assume that other road users (pedestrians, bicyclists, and other drivers) are going to be careless and make mistakes. Anticipate what they might do and be ready.
- Allow enough following distance between you and the driver in front of you.

- Focus on the task of driving.

Control of a Vehicle

Braking, steering, and accelerating are important factors in helping to control a vehicle while driving.

Braking

Braking action involves perception time and reaction time. Deciding to push the brake pedal is perception time. Actually doing it is reaction time.

Average driver reaction time is about three-quarters of a second. In that time, a vehicle moving at 100 km/h (60 mph) travels 20 m (66 ft), which could be a lot of distance in an emergency.

Helpful braking tips to keep in mind include:

- Keep enough distance between you and the vehicle in front of you.
- Avoid needless heavy braking.
- Keep pace with traffic.

If the engine ever stops while the vehicle is being driven, brake normally but do not pump the brakes. Doing so could make the pedal harder to push down. If the engine stops, there will be some power brake assist but it will be used when the brake is applied. Once the power assist is used up, it can take longer to stop and the brake pedal will be harder to push.

Steering

Electric Power Steering

The vehicle has electric power steering. It does not have power steering fluid. Regular maintenance is not required.

If power steering assist is lost due to a system malfunction, the vehicle can be steered, but may require increased effort.

See your dealer if there is a problem.

If the steering wheel is turned until it reaches the end of its travel and is held against that position for an extended period of time, power steering assist may be reduced.

If the steering assistance is used for an extended period of time, power assistance may be reduced.

Normal use of the power steering assist should return when the system cools down.

See specific vehicle steering messages under *Service Vehicle Messages* ⇨ *127*. See your dealer if there is a problem.

Bend Tips

- Take bends at a reasonable speed.
- Reduce speed before entering a bend.
- Maintain a reasonable steady speed through the bend.
- Wait until the vehicle is out of the bend before accelerating gently into the straight.

Steering in Emergencies

- There are some situations when steering around a problem may be more effective than braking.
- Holding both sides of the steering wheel allows you to turn 180 degrees without removing a hand.
- The Antilock Brake System (ABS) allows steering while braking.

Off-Road Recovery

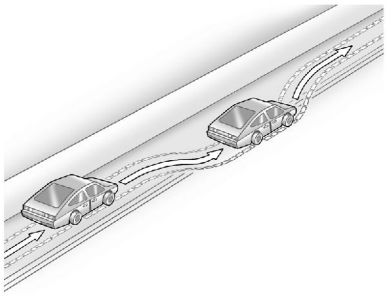

The vehicle's right wheels can drop off the edge of a road onto the shoulder while driving. Follow these tips:

1. Ease off the accelerator and then, if there is nothing in the way, steer the vehicle so that it straddles the edge of the pavement.
2. Turn the steering wheel about one-eighth of a turn, until the right front tyre contacts the pavement edge.
3. Turn the steering wheel to go straight down the roadway.

Loss of Control

Skidding

There are three types of skids that correspond to the vehicle's three control systems:

- Braking Skid - wheels are not rolling.
- Steering or Cornering Skid - too much speed or steering in a bend causes tyres to slip and lose cornering force.
- Acceleration Skid - too much throttle causes the driving wheels to spin.

Defensive drivers avoid most skids by taking reasonable care suited to existing conditions, and by not overdriving those conditions. But skids are always possible.

If the vehicle starts to slide, follow these suggestions:

- Ease your foot off the accelerator pedal and steer the way you want the vehicle to go. The vehicle may straighten out. Be ready for a second skid if it occurs.
- Slow down and adjust your driving according to weather conditions. Stopping distance can be longer and vehicle control can be affected when traction is reduced by water, snow, ice, gravel, or other material on the road. Learn to recognise warning clues - such as enough water, ice, or packed snow on the road to make a mirrored surface - and slow down when you have any doubt.

- Try to avoid sudden steering, acceleration, or braking, including reducing vehicle speed by shifting to a lower gear. Any sudden changes could cause the tyres to slide.

Remember: Antilock brakes help avoid only the braking skid.

Track Events and Competitive Driving

Track events and competitive driving may affect the vehicle warranty. See the warranty manual before using the vehicle for racing or other competitive driving.

The new vehicle run-in must be performed before the vehicle is used for competitive driving. See *New Vehicle Run-In* ⇨ *165*.

Engine Oil

Caution

If you use the vehicle for racing or other competitive driving, the engine may use more oil than it would with normal use. Low oil levels can damage the engine. For information on how to add oil, see *Engine Oil* ⇨ *208*.

Be sure to check the oil level often during racing or other competitive driving and keep the level at or near the upper mark that shows the proper operating range on the engine oil dipstick.

2.0L (LTG) Turbo Engine

Keep the oil level at or near 1 L (1 qt) above the upper mark on the engine oil dipstick which shows the proper operating range.

6.2L (LT1) Engine

Change the engine oil to 0W-40 or 5W-40 that meets the dexos2™ specification. If this oil is not available, the following oils can be used as an alternative: Valvoline® SYNPOWER MST 5W-40, Mobil® 1 ESP Formula M 5W-40. See *Capacities and Specifications* ⇨ *277*.

For track use only, it is recommended that the oil control kit be installed to prevent excessive oil consumption. This kit is available through your dealer.

Caution

Extended track operation without this kit installed may result in a low oil level and could result in engine damage.

Automatic Transmission Fluid

Have the gearbox fluid set to the track specific oil level prior to track usage. Gearbox fluid should be changed after 30 hours of track usage. Any transmission level set or change should be performed at your retailer.

Rear Axle Fluid

The rear axle fluid temperatures may be higher than when driving in severe conditions. Drain and refill with new fluid after the first racing or competitive driving event, and then after every 24 hours of racing or competitive driving. See *Recommended Fluids and Lubricants* ⇨ *273*.

Caution

During a first time track or racing event, high rear axle temperatures can occur. Damage could be caused to the rear axle and would not be covered by the vehicle warranty. Do not drive as long or as fast the first time the vehicle is driven on the track or raced.

Regularly inspect the drive shaft/prop. shaft couplings and half shaft boots for cracking or grease leakage. It is not recommended that the vehicle be used for ongoing race track/competitive driving.

For extended track use, GM recommends installing a rear differential cooler to protect the rear axle.

Brake Fluid

For track events or competitive driving, it is recommended that the brake fluid be replaced with a high performance brake fluid that has a dry boiling point greater than 279 °C (534 °F). After conversion to the high performance brake fluid, follow the brake fluid service recommendations outlined by the fluid manufacturer. Do not use silicone or DOT-5 brake fluids.

Brake Burnishing

To prepare the Camaro brake systems for track events and racing, complete the appropriate high performance brake burnishing procedure described below.

New brake pads must be burnished before racing or competitive driving.

Caution

These procedures are specific to the Camaro SS, or LT with Y4Q Heavy Duty Cooling System that is equipped with J55 brakes. This procedure should not be run on other Camaro models as damage may result.

Caution

The new vehicle running-in period should be completed before performing the brake burnishing procedure or damage may occur to the powertrain/engine. See *New Vehicle Run-In* ⇨ *165*.

When performed as instructed, this procedure will not damage the brakes. During the burnishing procedure, the brake pads will smoke and produce an odour. The braking force and pedal travel may

increase. After the procedure is complete, the brake pads may appear white at the rotor contact.

Run this procedure in a safe manner and in compliance with all local and state ordinances/laws regarding motor vehicle operation. Run this procedure only on dry pavement.

Racing/Track Brake Burnishing Procedure

Caution
Brake pedal fade will occur during this track burnish procedure and can cause brake pedal travel and force to increase. This could extend stopping distance until the brakes are fully burnished.

1. Apply the brakes 25 times starting at 100 km/h (60 mph) to 50 km/h (30 mph) while decelerating at 0.4 g. This is a medium brake application. Drive for at least 1 km (0.6 mi) between applying the brakes. This first step may be skipped if there are more than 320 km (200 mi) on the brake pads.
2. Repeatedly apply the brakes from 100 km/h (60 mph) to 25 km/h (15 mph) while decelerating at 0.8 g. This is a hard brake application, without activating the Antilock Brake System (ABS). Drive for at least 1 km (0.6 mi) between stops. Repeat until the brake pedal travel starts to increase. Depending on conditions, this should take no longer than 25 brake applications.
3. Cool down: Drive at 100 km/h (60 mph) for approximately 15 km (10 mi) without using the brakes.
4. Apply the brakes 25 times from 100 km/h (60 mph) to 50 km/h (30 mph) while decelerating at 0.4 g. This is a medium brake application. Drive for at least 1 km (0.6 mi) between applications.

Front Tyre Deflectors, Lower Control Arm Deflectors, and Disc Splash Shields (SS Only)

Before any racing event, remove the tyre deflectors in the front of the vehicle, and replace the original deflector and splash shield with the tall deflector and small splash shield.

Caution
Race track driving with the original front disc brake splash shield and front tyre deflector may result in brake pedal fade due to high rotor temperatures.

To install the tall deflector and small splash shield:



1. Remove the tyre deflector.
2. Remove the front wheels.

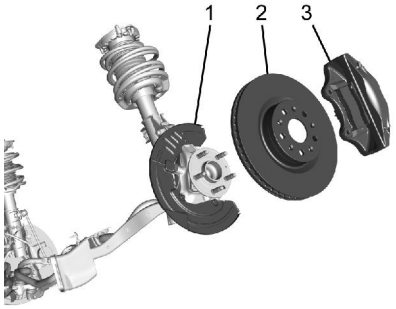

3. Remove the callipers (3) from the knuckle.
4. Remove the brake rotors (2).
5. Remove the original front splash shields (1).
6. Remove the lower control arm deflectors.
7. Detach the engine harness clips from the lower control arm deflector.

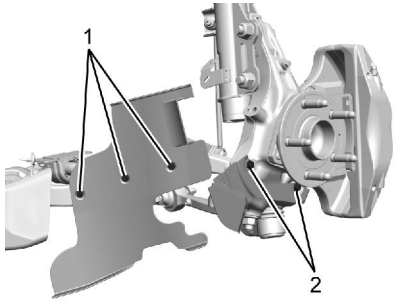

8. Install the small splash shields with two screws (2) per corner. Torque to 9 N•m (80 lb inch).

Caution

Failure to reattach the engine harness clips correctly could cause possible interference with the wheel speed sensor and vehicle damage.

9. Re-attach the engine harness clips by pushing them from the bottom up, on the back tab. On

the original deflector, the push pins are pushed from the top down.

10. Install the tall deflectors with three screws (1) per corner. Torque to 3.3 N•m (29 lb inch).
11. Install the front rotors with one screw per corner. Torque to 9 N•m (80 lb inch).

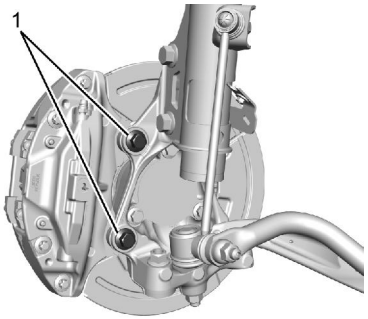

12. Apply liquid thread adhesive to the calliper bolts (GM Part No. 9985399 – Loctite 272 – Goodwrench 12345493). Install the callipers with two screws (1) per corner. Torque the calliper bolts to 200 N•m (148 lb ft).
13. Reinstall the front wheels using the wheel nut torque. See *Capacities and Specifications* ⇨ 277.

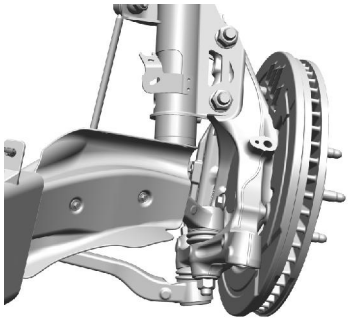

Caution

After a track event, remove the tall deflector and the small splash shield and reinstall the original deflector and splash shield. Failure to reinstall the original

(Continued)

Caution (Continued)

parts may lead to corrosion, loss of output, noise, premature brake pad and rotor wear, reduced high-speed wet braking, and damage to the tall deflector.

14. After a track event, repeat the steps to reinstall the original lower control arm deflectors and splash shields.
15. Reinstall the tyre deflectors.

Driving on Wet Roads

Rain and wet roads can reduce vehicle traction and affect your ability to stop and accelerate. Always drive slower in these types of driving conditions and avoid driving through large puddles and deep-standing or flowing water.

⚠ Warning

Wet brakes can cause crashes. They might not work as well in a quick stop and could cause pulling to one side. You could lose control of the vehicle.

After driving through a large puddle of water or a car/vehicle wash, lightly apply the brake pedal until the brakes work normally.

Flowing or rushing water creates strong forces. Driving through flowing water could cause the vehicle to be carried away. If this happens, you and other vehicle occupants could drown. Do not ignore police warnings and be very cautious about trying to drive through flowing water.

Aquaplaning

Aquaplaning is dangerous. Water can build up under the vehicle's tyres so they actually ride on the water. This can happen if the road is wet enough and you are going fast enough. When the vehicle is aquaplaning, it has little or no contact with the road.

There is no hard and fast rule about aquaplaning. The best advice is to slow down when the road is wet.

Other Rainy Weather Tips

Besides slowing down, other wet weather driving tips include:

- Allow extra following distance.
- Overtake with caution.
- Keep windscreen wiping equipment in good condition.
- Keep the windscreen washer fluid reservoir filled.
- Have good tyres with proper tread depth. See *Tyres* ⇨ *235*.
- Turn off cruise control.

Hill and Mountain Roads

Driving on steep hills or through mountains is different than driving on flat or rolling terrain. Tips include:

- Keep the vehicle serviced and in good shape.
- Check all fluid levels and brakes, tyres, cooling system, and transmission.
- Shift to a lower gear when going down steep or long hills.

⚠ Warning

Using the brakes to slow the vehicle on a long downhill slope can cause brake overheating, can reduce brake performance, and could result in a loss of braking. Shift the transmission to a lower gear to let the engine assist the brakes on a steep downhill slope.

⚠ Warning

Coasting downhill in N (Neutral) or with the ignition off is dangerous. This can cause overheating of the brakes and loss of steering. Always have the engine running and the vehicle in gear.

- Drive at speeds that keep the vehicle in its own lane. Do not swing wide or cross the centre line.
- Be alert on top of hills; something could be in your lane (e.g., stalled car, accident).
- Pay attention to special road signs (e.g., falling rocks area, winding roads, long gradients, overtaking or no-overtaking zones) and take appropriate action.

If the Vehicle Is Stuck

Slowly and cautiously spin the wheels to free the vehicle when stuck in sand, mud, ice, or snow.

If stuck too severely for the traction system to free the vehicle, turn the traction system off and use the rocking method. See *Traction Control/Electronic Stability Control* ⇨ *182*.

⚠ Warning

If the vehicle's tyres spin at high speed, they can explode, and you or others could be injured. The vehicle can overheat, causing an engine compartment fire or other damage. Spin the wheels as little as possible and avoid going above 56 km/h (35 mph).

Rocking the Vehicle to Get it Out

Turn the steering wheel left and right to clear the area around the front wheels. Turn off any traction system. Shift back and forth between R (Reverse) and a low forward gear, spinning the wheels as little as possible. To prevent transmission wear, wait until the wheels stop spinning before shifting gears. Release the accelerator pedal while shifting, and press lightly on the accelerator pedal when the transmission is in gear. Slowly spinning the wheels in the forward and reverse directions causes a rocking motion that could free the vehicle. If that does not get the vehicle out after a few tries, it might need to be towed out. If the vehicle does need to be towed out, see *Towing the Vehicle* ⇨ *261*.

Vehicle Load Limits

Tyre and Loading Information Label

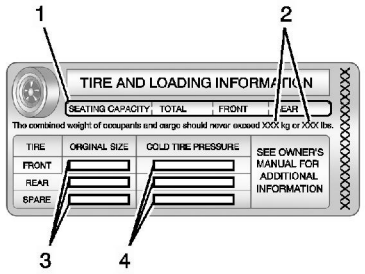

Label Example

The Tyre and Loading Information label shows the tyre size of the original equipment tyres (3) and the recommended cold tyre inflation pressures (4). For more information on tyres and inflation see *Tyres* ⇨ *235* and *Tyre Pressure* ⇨ *239*.

This label is located near the door lock mechanism on the rear frame of the left front door.

The Tyre and Loading Information label shows the number of occupant seating positions (1), and the maximum vehicle capacity weight (2) in kilogrammes and pounds.

Do not exceed the maximum vehicle capacity when loading the vehicle.

See “Certification Label” for additional loading information.

Certification Label

A vehicle specific Certification label is located below the door lock mechanism on the rear frame of the left door or the rear edge of the left front door. The label tells the gross weight capacity of the vehicle, called the Gross Vehicle Weight Rating (GVWR). The GVWR includes the weight of the vehicle, all occupants, fuel, and cargo. Never exceed the GVWR for the vehicle or the Gross Axle Weight Rating (GAWR) for either the front or rear axle.

This vehicle may have two certification labels: one U.S. label and one European label. Be sure to reference the European label for information.

Using heavier suspension components for extra durability may not change the weight rating. Ask your dealer to help you load the vehicle correctly.

Maximum Front and Rear Axle Weights

The label also shows the maximum weight the front axle can carry (front Gross Axle Weight Rating) and the maximum weight the rear axle can carry (rear Gross Axle Weight Rating).

The weight of the cargo load must be properly distributed over both the front and rear axles.

If you are unsure of the vehicle's front, rear or total weight, weigh the vehicle at a weigh station. Your dealer can assist with this.

Never exceed the Gross Vehicle Weight Rating or the Gross Axle Weight Ratings.

⚠ Warning

Things inside the vehicle can strike and injure people in a sudden stop or turn, or in a crash.

- Put things in the cargo area of the vehicle. In the cargo area, put them as far forward as possible. Try to spread the weight evenly.
- Never stack heavier things, like suitcases, inside the vehicle so that some of them are above the tops of the seats.

(Continued)

Warning (Continued)

- Do not leave an unsecured child restraint in the vehicle.
- Secure loose items in the vehicle.
- Do not leave a seat folded down unless needed.

Starting and Operating

New Vehicle Run-In

Caution

Follow these recommended guidelines during the first 2.414 km (1.500 mi) of driving this vehicle. Parts have a running-in period and performance will be better in the long run.

- Avoid full throttle starts and abrupt stops.
- Do not exceed 4,000 engine rpm.
- Avoid driving at any one constant speed, fast or slow.
- Do not drive above 129 km/h (80 mph).
- Avoid downshifting to brake or slow the vehicle when the engine speed will exceed 4000 rpm.

(Continued)

Caution (Continued)

- Do not let the engine labour. Never lug the engine in high gear at low speeds. With a manual gearbox, shift to the next lower gear. This rule applies at all times, not just during the running-in period.
- Do not participate in racing events, sport driving schools, or similar activities during this running-in period.
- Check engine oil with every refuelling and add if necessary. Oil and fuel consumption may be higher than normal during the first 2.414 km (1.500 mi).
- To run in new tyres, drive at moderate speeds and avoid hard cornering for the first 322 km (200 mi). New tyres do not have maximum traction and may tend to slip.

(Continued)

Caution (Continued)

- New brake linings also need a running-in period. Avoid braking hard during the first 322 km (200 mi). This is recommended every time brake linings are replaced.
- Should the vehicle be used for racing or competitive driving (after run-in), the rear axle lubricant must be replaced beforehand.

See *Track Events and Competitive Driving* ⇨ *157*.

Ignition Positions

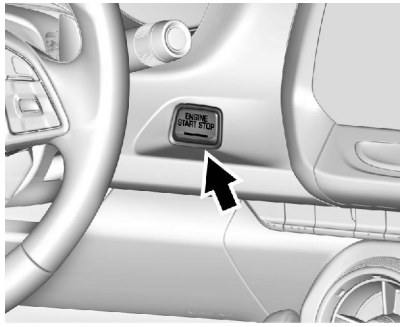

The vehicle has an electronic keyless ignition with pushbutton start.

Pressing the button cycles it through three modes: ACC/ACCESSORY, ON/RUN/START, and Stopping the Engine/OFF.

The Remote Keyless Entry (RKE) transmitter must be in the vehicle for the system to operate. If the pushbutton start is not working, the vehicle may be near a strong radio antenna signal causing interference

to the Keyless Access system. See *Remote Keyless Entry (RKE) System Operation* ⇨ *24*.

To shift out of P (Park), the vehicle must be in ON/RUN and the brake pedal must be applied.

Stopping the Engine/OFF (No Indicator Lights) : When the vehicle is stopped, press ENGINE START/STOP once to turn the engine off.

If the vehicle is in P (Park), the ignition will turn off, and Retained Accessory Power (RAP) will remain active. See *Retained Accessory Power (RAP)* ⇨ *170*.

Automatic Transmission

If the vehicle is not in P (Park), the ignition will return to ACC/ ACCESSORY and display a message in the Driver Information Centre (DIC). See *Transmission Messages* ⇨ *129*. When the vehicle is shifted into P (Park), the ignition system will switch to OFF.

Manual Gearbox

If the vehicle is stationary, the ignition will turn off, and Retained Accessory Power (RAP) will remain active. See *Retained Accessory Power (RAP)* ⇨ *170*.

Do not turn the engine off when the vehicle is moving. This will cause a loss of power assist in the brake and steering systems and disable the airbags.

If the vehicle must be shut off in an emergency:

1. Brake using a firm and steady pressure. Do not pump the brakes repeatedly. This may deplete power assist, requiring increased brake pedal force.
2. Shift the vehicle to N (Neutral). This can be done while the vehicle is moving. After shifting to N (Neutral), firmly apply the brakes and steer the vehicle to a safe location.
3. Come to a complete stop. Shift to P (Park) with an automatic transmission, or N (Neutral) with a manual gearbox. Turn the ignition to OFF.
4. Apply the parking brake. See *Electric Parking Brake* ⇨ *180*.

⚠ Warning

Turning off the vehicle while moving may cause loss of power assistance in the brake and steering systems and disable the airbags. While driving, only shut the vehicle off in an emergency.

If the vehicle cannot be pulled over, and must be shut off while driving, press and hold ENGINE START/ STOP for longer than two seconds, or press twice within five seconds.

ACC/ACCESSORY (Amber Indicator Light) : This mode allows the use of some electrical accessories when the engine is off.

With the ignition off, pressing the button once without the brake pedal applied will place the ignition system in ACC/ACCESSORY.

The ignition will switch from ACC/ ACCESSORY to OFF after five minutes to prevent battery rundown.

ON/RUN/START (Green Indicator Light) : This mode is for driving and starting. With the ignition off, and the brake pedal applied, pressing the button once will place the ignition system in ON/RUN/START. Once engine cranking begins, release the button. Engine cranking will continue until the engine starts. See *Starting the Engine* ⇨ *168*. The ignition will then remain in ON/RUN.

Service Only Mode

This power mode is available for service and diagnostics, and to verify the proper operation of the malfunction indicator lamp as may be required for emission inspection purposes. With the vehicle off, and the brake pedal not applied, pressing and holding the button for more than five seconds will place the vehicle in Service Only Mode. The instruments and audio systems will operate as they do in ON/RUN, but the vehicle will not be able to be driven. The engine will not start in Service Only Mode. Press the button again to turn the vehicle off.

Starting the Engine

Place the transmission in the proper gear.

Caution

If you add electrical parts or accessories, you could change the way the engine operates. Any resulting damage would not be covered by the vehicle warranty. See *Add-On Electrical Equipment* ⇨ *201*.

For an automatic transmission, move the gear lever to P (Park) or N (Neutral). To restart the vehicle when it is already moving, use N (Neutral) only.

Caution

Do not try to shift to P (Park) if the vehicle is moving. If you do, you could damage the transmission. Shift to P (Park) only when the vehicle is stopped.

For a manual gearbox, place the gear lever in Neutral with the parking brake engaged. Hold the clutch pedal down to the floor and start the engine.

The RKE transmitter must be inside the vehicle for the ignition to work.

Cell phone chargers can interfere with the operation of the Keyless Access system. Battery chargers should not be plugged in when starting or turning off the engine.

To start the vehicle:

1. For vehicles with an automatic transmission, press the brake pedal, then press ENGINE START/STOP on the instrument panel. For vehicles

with a manual gearbox, press the clutch pedal first, then press ENGINE START/STOP.

If there is no RKE transmitter in the vehicle or if there is something causing interference with it, the DIC will display a message. See *Key and Lock Messages* ⇨ *125*.

2. When the engine begins cranking, let go of the button and the engine cranks automatically until it starts. If the battery in the RKE transmitter is weak, the DIC will display a message. The vehicle can still be driven.

   See "Starting the Vehicle with a Low Transmitter Battery" under *Remote Keyless Entry (RKE) System Operation* ⇨ *24*. If the RKE transmitter battery is dead, insert it into the rear cupholder to enable engine starting. See "NO REMOTE KEY WAS DETECTED PLACE KEY IN TRANSMITTER POCKET THEN START YOUR VEHICLE" under *Key and Lock Messages* ⇨ *125*.

3. Do not race the engine immediately after starting it. Operate the engine and transmission gently until the oil warms up and lubricates all moving parts.

4. If the engine does not start and no DIC message is displayed, wait 15 seconds before trying again to let the cranking motor cool down.

   If the engine does not start after five to 10 seconds, especially in very cold weather (below −18 °C or 0 °F), it could be flooded with too much petrol. Try pushing the accelerator pedal all the way to the floor while cranking for up to 15 seconds maximum. Wait at least 15 seconds between each try, to allow the cranking motor to cool down. When the engine starts, let go of the accelerator. If the vehicle starts briefly but then stops again, repeat these steps. This clears the extra petrol from the engine.

Caution

Cranking the engine for long periods of time, by returning the ignition to the START position immediately after cranking has ended, can overheat and damage the cranking motor, and drain the battery. Wait at least 15 seconds between each try, to let the cranking motor cool down.

Stopping the Engine

If the vehicle has an automatic transmission, move the gear lever to P (Park) and press and hold ENGINE START/STOP on the instrument panel, until the engine shuts off. If the gear lever is not in P (Park), the engine shuts off and the vehicle goes into the accessory mode. The DIC displays SHIFT TO PARK. Once the shift lever is moved to P (Park), the vehicle turns off.
If the vehicle has a manual gearbox,

move the gear lever to R (Reverse) and apply the parking brake after turning off the engine by pressing and holding ENGINE START/STOP.

If the RKE transmitter is not detected inside the vehicle when it is turned to OFF, the DIC displays a message. See *Key and Lock Messages* ⇨ *125*.

Retained Accessory Power (RAP)

These vehicle accessories may be used for up to 10 minutes after the engine is turned off:

- Audio System
- Power Windows
- Sunroof (if equipped)

The power windows and sunroof will continue to work for up to 10 minutes or until any door is opened. The radio will work when the ignition is in ON/RUN or ACC/ACCESSORY. Once the ignition is turned from ON/RUN to OFF, the radio will continue to work for 10 minutes, or until the driver door is opened.

Shifting Into Park

To shift into P (Park):

1. Hold the brake pedal down and set the parking brake.

   See *Electric Parking Brake* ⇨ *180*.
2. Hold the button on the shift lever and push the lever toward the front of the vehicle into P (Park).
3. Turn the ignition to OFF.

Leaving the Vehicle with the Engine Running

⚠ Warning

It can be dangerous to leave the vehicle with the engine running. It could overheat and catch fire.

(Continued)

Warning (Continued)

It is dangerous to get out of the vehicle if the shift lever is not fully in P (Park) with the parking brake firmly applied. The vehicle can roll.

Do not leave the vehicle when the engine is running. If you have left the engine running, the vehicle can move suddenly. You or others could be injured. To be sure the vehicle will not move, even when you are on fairly level ground, always set the parking brake and move the shift lever to P (Park). See *Shifting Into Park* ⇨ *170*.

If you have to leave the vehicle with the engine running, the vehicle must be in P (Park) and the parking brake set.

Release the button and check that the shift lever cannot be moved out of P (Park).

Torque Lock

Torque lock is when the weight of the vehicle puts too much force on the parking pawl in the transmission. This happens when parking on a hill and shifting the transmission into P (Park) is not done properly and then it is difficult to shift out of P (Park). To prevent torque lock, set the parking brake and then shift into P (Park). To find out how, see "Shifting Into Park" previously in this section.

If torque lock does occur, the vehicle may need to be pushed uphill by another vehicle to relieve the parking pawl pressure, so you can shift out of P (Park).

Shifting out of Park

This vehicle is equipped with an electronic shift lock control system. The shift lock release is designed to prevent movement of the shift lever out of P (Park), unless the ignition is in ON/RUN and the brake pedal is applied.

The shift lock release is always functional except in the case of an uncharged or low voltage (less than 9-volt) battery.

If the vehicle has an uncharged battery or a battery with low voltage, try charging or jump starting the battery. See *Jump Starting* ⇨ *258*.

To shift out of P (Park):

1. Apply the brake pedal.
2. Turn the ignition to the ON/RUN position.
3. Release the parking brake. See *Electric Parking Brake* ⇨ *180*.
4. Press the shift lever button.
5. Move the shift lever to the desired position.

If still unable to shift out of P (Park):

1. Fully release the shift lever button.
2. Hold the brake pedal down and press the gear lever button again.
3. Move the shift lever to the desired position.

If the gear lever still cannot be moved from P (Park), see your retailer.

Parking

If the vehicle has a manual transmission, before getting out of the vehicle, move the shift lever into R (Reverse), and firmly apply the parking brake. Once the gear lever has been placed into R (Reverse) with the clutch pedal pressed in, turn the ignition to OFF, and release the clutch.

Parking over Things That Burn

⚠ Warning

Things that can burn could touch hot exhaust parts under the vehicle and ignite. Do not park over papers, leaves, dry grass, or other things that can burn.

Active Fuel Management®

Vehicles with an automatic transmission have Active Fuel Management. This system allows the engine to operate on either all or four of its cylinders, depending on the driving conditions.

When less power is required, such as cruising at a constant vehicle speed, the system will operate in four cylinder mode, allowing the vehicle to achieve better fuel economy. When greater power demands are required, such as accelerating from a stop, overtaking, or merging onto a freeway, the system will maintain full-cylinder operation.

Extended Parking

It is better not to park with the vehicle running. If the vehicle is left while running, follow the proper steps to be sure the vehicle will not move and there is adequate ventilation. See *Shifting Into Park* ⇨ *170* and *Engine Exhaust* ⇨ *172*.

If the vehicle is left in P (Park) while running and the Remote Keyless Entry (RKE) transmitter is outside the vehicle, the vehicle will turn off after one hour.

If the vehicle is left in P (Park) while running and the RKE transmitter is inside, the vehicle will run for two hours. At the end of the second hour, the vehicle will turn off.

The timer will reset if the vehicle is taken out of P (Park) while it is running.

Engine Exhaust

⚠ Warning

Engine exhaust contains carbon monoxide (CO), which cannot be seen or smelled. Exposure to CO can cause unconsciousness and even death.

Exhaust may enter the vehicle if:

- The vehicle idles in areas with poor ventilation (parking garages, tunnels, deep snow that may block underbody airflow or exhaust pipes).
- The exhaust smells or sounds strange or different.
- The exhaust system leaks due to corrosion or damage.
- The vehicle exhaust system has been modified, damaged, or improperly repaired.

(Continued)

Warning (Continued)

- There are holes or openings in the vehicle body from damage or aftermarket modifications that are not completely sealed.

If unusual fumes are detected or if it is suspected that exhaust is coming into the vehicle:

- Drive it only with the windows completely down.
- Have the vehicle repaired immediately.

Never park the vehicle with the engine running in an enclosed area such as a garage or a building that has no fresh air ventilation.

Running the Vehicle While Parked

It is better not to park with the engine running.

If the vehicle is left with the engine running, follow the proper steps to be sure the vehicle will not move. See *Shifting Into Park* ⇨ *170* and *Engine Exhaust* ⇨ *172*. If the vehicle has a manual gearbox, see *Parking* ⇨ *171*.

Automatic Transmission

The Driver Information Centre (DIC) displays the current gear selected in the lower right corner. When Sport Mode is active, an S is displayed. If Manual Mode is active, an M and the current gear selected is displayed next to the M.

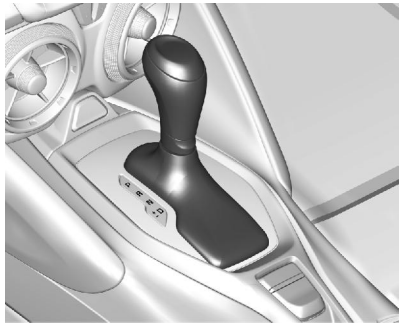

P : This position locks the rear wheels. It is the best position to use when starting the engine because the vehicle cannot move easily.

⚠ Warning

It is dangerous to get out of the vehicle if the shift lever is not fully in P (Park) with the parking brake firmly applied. The vehicle can roll.

Do not leave the vehicle when the engine is running. If you have left the engine running, the vehicle can move suddenly. You or others could be injured. To be sure the vehicle will not move, even when you are on fairly level ground, always set the parking brake and move the shift lever to P (Park). See *Shifting Into Park ⇨ 170*.

Make sure the shift lever is fully in P (Park) before starting the engine. The vehicle has an automatic transmission shift lock control system. The regular brake must be fully applied first and then the gear lever button must be pressed before shifting from P (Park) when the ignition is in ON/RUN. If you cannot shift out of P (Park), ease pressure on the gear lever, then push the gear lever all the way into P (Park) as you maintain brake application. Then press the shift lever button and move the shift lever into another gear. See *Shifting out of Park ⇨ 171*.

R : Use this gear to reverse.

Caution

Shifting to R (Reverse) while the vehicle is moving forward could damage the transmission. The repairs would not be covered by the vehicle warranty. Shift to R (Reverse) only after the vehicle is stopped.

To rock the vehicle back and forth to get out of snow, ice, or sand without damaging the transmission, see *If the Vehicle Is Stuck ⇨ 163*.

N : In this position, the engine does not connect with the wheels. To restart the engine when the vehicle is already moving, use N (Neutral) only. Also, use N (Neutral) when the vehicle is being towed.

⚠ Warning

Shifting into a drive gear while the engine is running at high speed is dangerous. Unless your foot is firmly on the brake pedal, the vehicle could move very rapidly. You could lose control and hit people or objects. Do not shift into a drive gear while the engine is running at high speed.

Caution

Shifting out of P (Park) or N (Neutral) with the engine running at high speed may damage the transmission. The repairs would not be covered by the vehicle warranty. Be sure the engine is not running at high speed when shifting the vehicle.

D : This position is for normal driving. It provides the best fuel economy.

If more power is needed for passing, and the vehicle is:

- Going less than 56 km/h (35 mph), push the accelerator pedal about halfway down.
- Going about 56 km/h (35 mph) or more, push the accelerator all the way down.

Powertrain Braking

When driving on steep descents with the gear lever in D (Drive) where frequent braking is required, the transmission will shift down a gear to help hold vehicle speed and reduce brake wear. If the driver continues to press the brake, the transmission will downshift until 3 (Third) gear is reached.

If the brake is released for some time, the transmission will up-shift a gear. If the road levels out and the accelerator pedal is pressed, the transmission will up-shift until the appropriate gear is reached.

Caution

If the vehicle does not shift gears, the transmission could be damaged. Have the vehicle serviced right away.

Performance Shifting

While driving in Sport Mode and Track Mode, if Tap Shift has not been activated, the transmission determines when the vehicle is being driven in a competitive manner. The transmission may remain in a gear longer than it would in the normal driving mode based on throttle input and vehicle lateral acceleration. If there is a rapid reduction in throttle from a heavy throttle position at high rpm, the transmission will maintain the current gear up to near redline rpm. While braking, the transmission will automatically downshift to the next lower gear keeping engine speed above approximately 3000 rpm. If the vehicle is then driven for a short time at a steady speed, and without high cornering loads, the transmission will upshift one gear at a time, until the highest available numerical gear is achieved. After shifting to the highest available numerical gear, the transmission will return to normal Sport Mode shifting.

Manual Mode

Driver Shift Control (DSC)

Caution

Driving with the engine at a high rpm without upshifting while using Driver Shift Control (DSC), could damage the vehicle. Always upshift when necessary while using DSC.

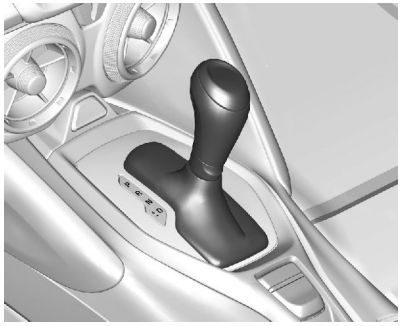

DSC allows shifting an automatic transmission similar to a manual gearbox. To use the DSC feature:

1. Move the gear lever to the left from D (Drive) into the side gate marked with +/−.
2. Press the gear lever forward to upshift or rearward to downshift.

While using the DSC feature, the vehicle will have firmer, quicker shifting. You can use this for sport driving or when climbing or descending hills, to stay in gear longer or to downshift for more power or engine braking.

The transmission will only allow you to shift into gears appropriate for the vehicle speed and engine revolutions per minute (rpm). The transmission will not automatically shift to the next lower gear if the engine rpm is too high or to the next higher gear when the maximum engine rpm is reached.

While in the DSC mode, the transmission will automatically downshift as the vehicle comes to a stop. This will allow for more power during take-off.

When accelerating the vehicle from a stop in snowy and icy conditions, you may want to shift into second gear. A higher gear allows the vehicle to gain more traction on slippery surfaces.

Tap Shift

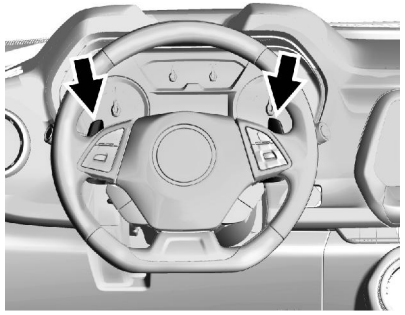

Tap Shift allows you to manually control the automatic transmission. To use Tap Shift, the gear lever must be in DSC Mode. Vehicles with this feature have indicators on the steering wheel. The paddles are on the back of the steering wheel. Tap the left paddle (−) to downshift, and the right paddle (+) to upshift. The Driver Information Centre (DIC) display indicates the gear the vehicle is in.

Holding the left paddle for an extended time will downshift the transmission to the lowest available gear.

While in Manual Mode, the transmission will prevent shifting to a lower gear if the engine speed is too high. If the tap down − (Minus) paddle is held while the vehicle slows down, the M in the DIC will flash, and the downshift will be allowed when vehicle speed is low enough. Continuing to hold the tap down − (Minus) paddle will not cause the transmission to continue downshifting. Each downshift must be requested separately by releasing and reapplying the tap down − (Minus) paddle.

Vehicles equipped with a Head-Up Display (HUD) may also have shift timing lights across the top of the display.

The rows of lights get closer together as the shift point gets closer. Shift the transmission before the lights come together in the display. Shift immediately if the lights are flashing.

See *Head-Up Display (HUD)* ⇨ *117*.

Temporary Tap Shift Mode allows brief entry into Tap Shift Mode while in D (Drive). Tapping either the upshift or downshift control will place the transmission in Tap Shift Mode. Exit Tap Shift Mode by holding the upshift control for two seconds. The system will return to automatic shifting after seven seconds of driving at a steady speed, or when the vehicle comes to a stop.

This may be used for sport driving or when climbing or descending hills, to stay in gear longer, or to downshift for more power or engine braking. The transmission will only allow you to shift into gears appropriate for the vehicle speed and engine revolutions per minute (rpm). The transmission will not automatically shift to the next higher gear if the engine rpm is too high. If shifting is prevented for any reason, the message SHIFT DENIED will appear in the DIC, indicating that the transmission has not shifted gears. While in the Tap Shift Mode, the transmission will not automatically downshift on hard acceleration.

When accelerating the vehicle from a stop in snowy and icy conditions, you may want to shift into 2 (Second) gear. A higher gear ratio allows you to gain more traction on slippery surfaces.

Manual Transmission

Shift Pattern

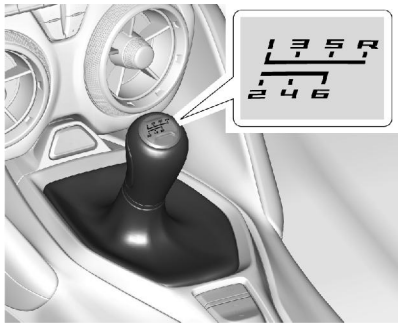

1 : Press the clutch pedal and shift into 1 (First). Then slowly let up on the clutch pedal while pressing the accelerator pedal.

Shift into 1 (First) when going less than 64 km/h (40 mph). If the vehicle comes to a complete stop and it is hard to shift into 1 (First), put the gear lever in Neutral and let up on the clutch. Press the clutch pedal back down. Then shift into 1 (First).

2 : Press the clutch pedal while letting up on the accelerator pedal and shift into 2 (Second). Then, slowly let up on the clutch pedal while pressing the accelerator pedal.

3, 4, 5, and 6 : Shift into 3 (Third), 4 (Fourth), 5 (Fifth), and 6 (Sixth) the same way as for 2 (Second). Slowly let up on the clutch pedal while pressing the accelerator pedal.

To stop, let up on the accelerator pedal and press the brake pedal. Just before the vehicle stops, press the clutch pedal and the brake pedal and shift to Neutral.

Neutral : Use this position when starting or idling the engine. The shift lever is in Neutral when it is centred in the shift pattern, not in any gear.

R : To reverse, press the clutch pedal and shift into R (Reverse). On V8 models, apply pressure to get the lever past 5 (Fifth) and 6 (Sixth) into R (Reverse). Let up on the clutch pedal slowly while pressing the accelerator pedal.

Vehicles equipped with a Head-Up Display (HUD) may also have shift timing lights across the top of the display.

The rows of lights get closer together as the shift point gets closer. Shift the transmission before the lights come together in the display. Shift immediately if the lights are flashing.

See *Head-Up Display (HUD)* ⇨ *117*.

Active Rev Match

Vehicles equipped with a V8 engine and a manual gearbox have Active Rev Match (ARM). ARM aids in smoother shifting by matching the engine speed to the next selected gear. By monitoring gear lever and clutch operation, ARM adjusts engine speed to match a calibrated value based on gear selection. On upshifts and downshifts, engine speed will be decreased and increased to match vehicle road speed and transmission gear position. ARM is maintained for a

few seconds between shifts, then deactivates if the shift is not completed.

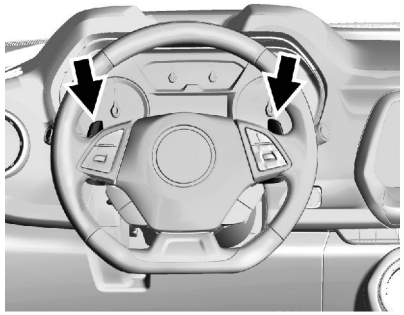

The system is activated and deactivated by pressing either of the paddles marked REV MATCH on the steering wheel. The system must be activated with each new ignition cycle.

A gear indicator in the instrument cluster displays the current gear selected:

- When ARM is activated, the gear number is amber.
- When ARM is deactivated, the gear number is white.
- If no gear number is displayed while the gear lever is in gear, service is required. ARM will be disabled, and the malfunction indicator lamp will be on. See *Malfunction Indicator Lamp (Check Engine Light)* ⇨ *109*. The clutch and manual gearbox will continue to operate normally.

ARM will also:

- Be active above 25 km/h (16 mph).
- Match engine speed up to 5400 rpm.
- Not operate when the accelerator pedal is applied.
- Be disabled when the coolant temperature is below 0 °C (32 °F).

Brakes

Antilock Brake System (ABS)

This vehicle has an Antilock Brake System (ABS), an advanced electronic braking system that helps prevent a braking skid.

When the vehicle begins to drive away, ABS checks itself.
A momentary motor or clicking noise may be heard while this test is going on, and it may even be noticed that the brake pedal moves a little. This is normal.



If there is a problem with ABS, this warning light stays on. See *Antilock Brake System (ABS) Warning Light* ⇨ *112*.

If driving safely on a wet road and it becomes necessary to slam on the brakes and continue braking to avoid a sudden obstacle, a computer senses the wheels are slowing down. If one of the wheels is about to stop rolling, the computer will separately work the brakes at each wheel.

ABS can change the brake pressure to each wheel, as required, faster than any driver could. This can help you steer around the obstacle while braking hard.

As the brakes are applied, the computer keeps receiving updates on wheel speed and controls braking pressure accordingly.

Remember: ABS does not change the time needed to get a foot up to the brake pedal or always decrease stopping distance. If you get too close to the vehicle in front of you, there will not be enough time to apply the brakes if that vehicle suddenly slows or stops. Always leave enough room up ahead to stop, even with ABS.

Using ABS

Do not pump the brakes. Just hold the brake pedal down firmly and let ABS work. You may hear the ABS pump or motor operating and feel the brake pedal pulsate. This is normal.

Braking in Emergencies

ABS allows you to steer and brake at the same time. In many emergencies, steering can help more than even the very best braking.

Electric Parking Brake

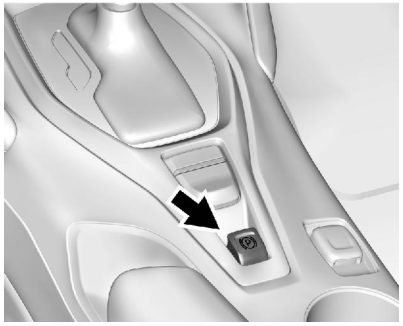

The vehicle has an Electric Parking Brake (EPB). The switch is on the centre console. The EPB can always be activated, even if the ignition is off. To prevent draining the battery, avoid repeated cycles of the EPB when the engine is not running.

The system has a red handbrake status light and an amber handbrake warning light. See *Electric Parking Brake Light* ⇨ *111* and *Service Electric Parking Brake Light* ⇨ *112*. There are also handbrake-related Driver Information Centre (DIC) messages. See *Brake System Messages* ⇨ *121*. In case of insufficient electrical power, the EPB cannot be applied or released.

Before leaving the vehicle, check the red handbrake status light to ensure that the handbrake is applied.

EPB Apply

To apply the EPB:

1. Be sure the vehicle is at a complete stop.

2. Lift up the EPB switch momentarily.

The red handbrake status light will flash and then stay on once the EPB is fully applied. If the red handbrake status light flashes continuously, then the EPB is only partially applied or there is a problem with the EPB. A DIC message will display. Release the EPB and try to apply it again. If the light does not come on, or keeps flashing, have the vehicle serviced. Do not drive the vehicle if the red handbrake status light is flashing. See your dealer. See *Electric Parking Brake Light* ⇨ *111*.

If the amber handbrake warning light is on, lift up on the EPB switch and hold it up. Continue to hold the switch until the red handbrake status light remains on. If the amber handbrake warning light remains on, see your dealer.

If the EPB is applied while the vehicle is moving, the vehicle will decelerate as long as the switch is held up. If the switch is held up until the vehicle comes to a stop, the EPB will remain applied.

The vehicle may automatically apply the EPB in some situations when the vehicle is not moving. This is normal, and is done to periodically check the correct operation of the EPB system.

If the EPB fails to apply, the rear wheels should be blocked to prevent vehicle movement.

EPB Release

To release the EPB:

1. Place the ignition in the ACC/ ACCESSORY or ON/RUN position.
2. Apply and hold the brake pedal.
3. Press the EPB switch momentarily.

The EPB is released when the red handbrake status light is off.

If the amber parking brake warning light is on, release the EPB by pressing and holding the EPB switch. Continue to hold the switch until the red handbrake status light is off. If either light stays on after release is attempted, see your dealer.

Automatic EPB Release

The EPB will automatically release if the vehicle is running, placed into gear and an attempt is made to drive away. Avoid rapid acceleration when the EPB is applied, to preserve parking brake lining life.

The EPB can also be used to prevent roll back for vehicles with a manual gearbox starting on a hill. When no roll back is desired, an applied EPB will allow both feet to be used for the clutch and accelerator pedals in preparation for starting the vehicle moving in the intended direction. In this case, there is no need to press the switch to release the EPB.

Brake Assist

The Brake Assist feature is designed to assist the driver in stopping or decreasing vehicle speed in emergency driving conditions. This feature uses the stability system hydraulic brake control module to supplement the power brake system under conditions where the driver has quickly and forcefully applied the brake pedal in an attempt to quickly stop or slow down the vehicle. The stability system hydraulic brake control module increases brake pressure at each corner of the vehicle until the ABS activates. Minor brake pedal pulsation or pedal movement during this time is normal and the driver should continue to apply the brake pedal as the driving situation dictates. The Brake Assist feature will automatically disengage when the brake pedal is released or brake pedal pressure is quickly decreased.

Hill Start Assist (HSA)

If equipped, Hill Start Assist (HSA) may automatically activate when the vehicle is stopped on a gradient. This feature is designed to prevent the vehicle from rolling, either forward or rearward, during vehicle drive off. During the transition from releasing the brake pedal to accelerating to drive off on a grade, HSA holds the braking pressure to prevent rolling. HSA will not activate if the vehicle is in a drive gear and facing downhill or if the vehicle is facing uphill and in R (Reverse).

Ride Control Systems

Traction Control/ Electronic Stability Control

System Operation

The vehicle has a Traction Control System (TCS) and StabiliTrak®, an electronic stability control system. These systems help limit wheel slip and assist the driver in maintaining control, especially on slippery road conditions.

TCS activates if it senses that any of the drive wheels are spinning or beginning to lose traction. When this happens, TCS applies the brakes to the spinning wheels and reduces engine power to limit wheel spin.

StabiliTrak activates when the vehicle senses a difference between the intended path and the direction the vehicle is actually travelling. StabiliTrak selectively applies braking pressure to any one of the

vehicle wheel brakes to assist the driver in keeping the vehicle on the intended path.

If cruise control is being used and traction control or StabiliTrak begins to limit wheel spin, cruise control will disengage. Cruise control may be turned back on when road conditions allow.

Both systems come on automatically when the vehicle is started and begins to move. The systems may be heard or felt while they are operating or while performing diagnostic checks. This is normal and does not mean there is a problem with the vehicle.

It is recommended to leave both systems on for normal driving conditions, but it may be necessary to turn TCS off if the vehicle gets stuck in sand, mud, ice, or snow. See *If the Vehicle Is Stuck* ⇨ *163* and "Turning the Systems Off and On" later in this section.



The indicator light for both systems is in the instrument cluster. This light will:

- Flash when TCS is limiting wheel spin.
- Flash when StabiliTrak is activated.
- Turn on and stay on when either system is not working.

If either system fails to turn on or to activate, a message displays in the Driver Information Centre (DIC), and comes on and stays on to indicate that the system is inactive and is not assisting the driver in maintaining control. The vehicle is safe to drive, but driving should be adjusted accordingly.

If comes on and stays on:

1. Stop the vehicle.
2. Turn the engine off and wait 15 seconds.
3. Start the engine.

Drive the vehicle. If comes on and stays on, the vehicle may need more time to diagnose the problem. If the condition persists, see your dealer.

Turning the Systems Off and On

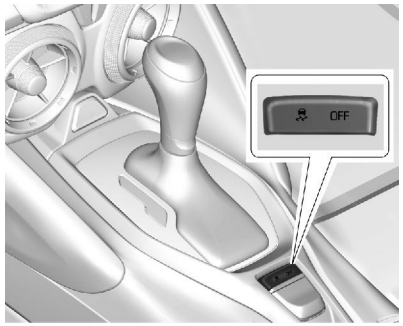

Caution

Do not repeatedly brake or accelerate heavily when TCS is off. The vehicle driveline could be damaged.

To turn off only TCS, press and release . The traction off light displays in the instrument cluster.

To turn TCS on again, press . The traction off light displayed in the instrument cluster will turn off.

If TCS is limiting wheel spin when is pressed, the system will not turn off until the wheels stop spinning.

To turn off both TCS and StabiliTrak, press and hold until the traction off light and StabiliTrak OFF light come on and stay on in the instrument cluster.

To turn TCS and StabiliTrak on again, press . The traction off light and StabiliTrak OFF light in the instrument cluster turn off.

Adding accessories can affect the vehicle performance. See *Accessories and Modifications* ⇨ *203*.

Engine Drag Control (EDC)

EDC improves vehicle stability by sensing if there is a difference in speed between the free rolling front wheels and the rear drive wheels that often occurs when the drivers take their foot off the accelerator pedal on slippery surfaces (snow, ice, etc.). When this is detected, EDC sends more torque to the rear wheels to make sure all four wheels are spinning at similar speeds, making the vehicle more stable.

Driver Mode Control

Driver Mode Control attempts to add a sportier feel, provide a more comfortable ride, or assist in different weather conditions or terrain. This system simultaneously changes the software calibration of various sub-systems. Depending on the option package, available features, and mode selected, the suspension, steering, and powertrain will change calibrations to achieve the desired mode characteristics. If the vehicle is equipped with Magnetic Ride Control, selecting the various Driver Modes adjusts the ride of the vehicle to enhance the ride performance for the road conditions and the selected mode.

While in the Sport and/or Track Modes, the vehicle monitors driving behaviour and automatically enables Performance Shift features when spirited driving is detected. These features maintain lower transmission gears to increase available engine braking and improve acceleration response. The vehicle will exit these features and return to normal operation after a short period when no spirited driving is detected.

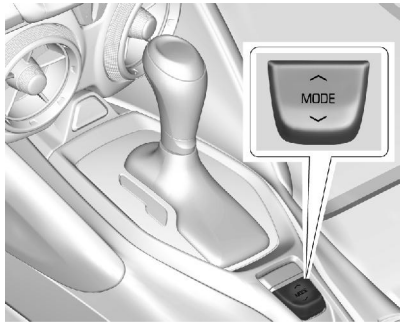

Driver Mode Control Switch

The Driver Mode Control has three or four modes: Tour, Sport, Snow/Ice, and Track. Press ∧ or ∨ on the MODE switch on the centre console to make a mode selection. Pressing the switch will display a graphic of all available ride modes and change to the next mode. The Tour and Sport Modes will feel similar on a smooth road. Select a new setting whenever driving conditions change.

Tour Mode

Use for normal city and highway driving to provide a smooth, soft ride.

When selected, the Tour Mode indicator will display in the Driver Information Centre (DIC).

Sport Mode

Use where road conditions or personal preference demand a more controlled response.

When selected, the Sport Mode indicator will display in the DIC.

When in Sport Mode, the vehicle will shift automatically but hold a lower gear longer than it would in the normal driving mode based on braking, throttle input, and vehicle lateral acceleration. See *Automatic Transmission* ⇨ *173*. The steering will change to provide more precise control. If the vehicle has Magnetic Ride Control, the suspension will change to provide better cornering performance. If the vehicle is equipped with Active Exhaust, the exhaust valves will open earlier and more often. Competitive Driving Mode can be accessed through this mode by pressing the button with this OFF icon twice.

Snow/Ice Mode

Use when more traction is needed during slippery conditions. The vehicle will upshift normally when the vehicle is moving. The acceleration will adjust to help provide a smoother launch. The transmission will also shift differently to assist in maintaining traction.

When selected, the Snow/Ice Mode indicator will display in the DIC.

This feature is not intended for use when the vehicle is stuck in sand, mud, ice, snow, or gravel. If the vehicle becomes stuck, see *If the Vehicle Is Stuck* ⇨ *163*.

Track Mode

Use when maximum vehicle handling is desired.

When selected, the Track Mode indicator will display in the DIC.

When in Track Mode, the automatic transmission and steering will function similar to Sport Mode. The accelerator pedal is adjusted to give maximum control during the highest level of spirited driving. The Magnetic Ride Control will be set to the optimum level for vehicle responsiveness. If the vehicle is equipped with Active Exhaust, the exhaust valves will open. Competitive Driving Mode can be accessed through this mode by pressing the button with this OFF icon.

There are attributes that vary by mode shown below. Not all vehicles have all features, depending on the vehicle options.

Modes:	SNOW/ICE	TOUR *Default*	SPORT	TRACK *not on all models*
Throttle Progression	Weather	Normal	Normal	Track
Transmission Shift Mode (Automatic Only)	Normal	Normal	Sport	Track
Engine Sound Management (If Equipped)	Stealth	Tour	Sport	Track
Engine Sound Management (turbo 4)	Tour	Tour	Sport	N/A
Steering	Tour	Tour	Sport	Track
Magnetic Ride Control (If Equipped)	Tour	Tour	Sport	Track
StabiliTrak - Competitive Driving Mode	N/A	N/A	Available	Available
Launch Control (when in Competitive Driving Mode)	N/A	N/A	Available	Available

Throttle Progression

Adjusts throttle sensitivity by selecting how quickly or slowly the throttle reacts to input.

Transmission Shift Mode (If Equipped)

Adjusts to either a smoother or firmer shift.

Engine Sound Management (If Equipped)

Changes when variable exhaust valves open.

Engine Sound Management (turbo 4)

Allows the ability to turn Engine Sound Enhancement off.

Steering

Adjusts from a lighter steering feel in Tour Mode to reduced assist for more steering feel.

Magnetic Ride Control (If Equipped)

Adjusts the shock damping firmness based on driving conditions to improve comfort and performance.

StabiliTrak - Competitive Driving Mode (If Equipped)

Available in Sport and Track Modes.

Launch Control (when in Competitive Driving Mode)

Available only in Sport and Track Modes for maximum “off-the-line” acceleration when in Competitive Driving Mode.

Competitive Driving Mode

Competitive Driving Mode and Launch Control are systems designed to allow increased performance while accelerating and/or cornering. This is accomplished by regulating and optimising the engine, brakes and suspension performance. These modes are for use at a closed course race track and are not intended for use on public roads. They will not compensate for a driver's inexperience or lack of familiarity with the race track. Drivers who prefer to allow the system to have more control of the engine, brakes, and suspension are advised to turn the normal TCS and StabiliTrak systems on.

Caution
Attempting to shift when the drive wheels are spinning and do not have traction may cause damage to the transmission. Damage caused by misuse of the vehicle is not covered by the vehicle warranty. Do not attempt to shift when the drive wheels do not have traction.

Competitive Driving Mode allows full engine power while the StabiliTrak system helps maintain directional control of the vehicle by selective brake application. In this mode, TCS is off and Launch Control is available. Adjust your driving style to account for the available engine power. See “Launch Control” later in this section.





These lights are on when the vehicle is in the Competitive Driving Mode.

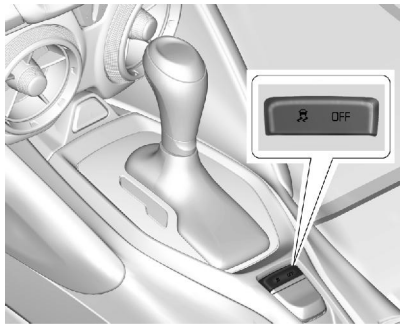

This optional handling mode can be selected by pressing the TCS/ StabiliTrak button two times. The appropriate message displays in the Driver Information Centre (DIC). See *Ride Control System Messages* ⇨ *126*.

When the TCS/StabiliTrak button is pressed again, the TCS and StabiliTrak systems are on. The appropriate message displays briefly in the DIC.

Launch Control

A Launch Control feature is available, within Competitive Driving Mode, to allow the driver to achieve high levels of vehicle acceleration in a straight line. Launch Control is a form of traction control that manages tyre spin while launching the vehicle. This feature is intended for use during closed course race events where consistent zero to sixty and quarter mile times are desirable.

Launch Control is only available when the following criteria are met:

- Competitive Driving Mode is selected.
- The vehicle is not moving.
- The steering wheel is pointing straight.

Manual Transmissions

- The clutch is pressed and the vehicle is in 1 (First) gear.
- The accelerator pedal is rapidly applied to wide open throttle.

The Launch Control feature will initially limit engine speed as the driver rapidly applies the accelerator pedal to wide open throttle. Allow the engine rpm to stabilise. A smooth, quick release of the clutch, while maintaining the fully pressed accelerator pedal, will manage wheel slip. Complete shifts are described in *Manual Transmission* ⇨ *178*.

Automatic Transmissions

- The brake pedal must be firmly pressed to the floor, equivalent to a panic brake event.
- The accelerator pedal is rapidly applied to wide open throttle. (If the vehicle rolls due to wide open throttle, release the throttle, press the brake pedal more firmly, and re-apply the accelerator to wide open throttle.)

After the vehicle is launched, the system continues in Competitive Driving Mode.

Competitive Driving Mode and Launch Control are systems designed for a closed course race track and not intended for use on public roads. The systems are not intended to compensate for lack of driver experience or familiarity with the race track.

Limited-Slip Rear Axle

Vehicles with a limited-slip rear axle can give more traction on snow, mud, ice, sand or gravel. When traction is low, this feature allows the drive wheel with the most traction to move the vehicle. The limited-slip rear axle also gives the driver enhanced control when cornering hard or completing a manoeuvre, such as a lane change. For vehicles with limited-slip differential, driven under severe conditions, the rear axle fluid should be changed. See *Competitive Driving Mode* ⇨ *188* and *Scheduled Maintenance* ⇨ *270*.

Cruise Control

With cruise control, the vehicle can maintain a speed of about 40 km/h (25 mph) or more without your having to keep your foot on the accelerator. Cruise control does not work at speeds below 40 km/h (25 mph).

⚠ Warning

Cruise control can be dangerous where you cannot drive safely at a steady speed. Do not use cruise control on winding roads or in heavy traffic.

Cruise control can be dangerous on slippery roads. On such roads, fast changes in tyre traction can cause excessive wheel slip, and you could lose control. Do not use cruise control on slippery roads.

If equipped with a manual gearbox, the cruise control will remain active when the gears are shifted. The cruise is disengaged if the clutch is pressed for several seconds.

If the StabiliTrak® system begins to limit wheel spin while using cruise control, the cruise control automatically disengages. See *Traction Control/Electronic Stability Control* ⇨ *182*. When road conditions allow you to safely use it again, cruise control can be turned back on.

If the brakes are applied, cruise control disengages.

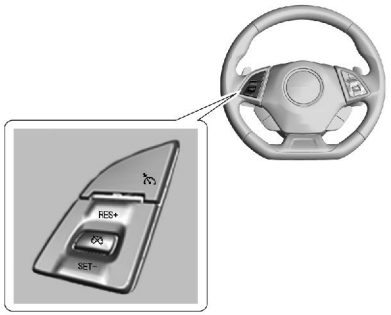

Cruise Control with Cancel Button

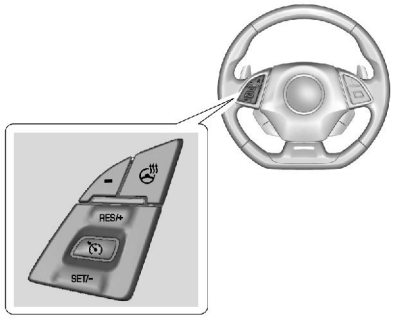

Cruise Control without Cancel Button

: If equipped, press to turn the system on and off. A white indicator appears in the instrument cluster when cruise is turned on.

: If equipped, press to disengage cruise control without erasing the set speed from memory.

RES+ : If there is a set speed in memory, press briefly to resume to that speed or hold upward to accelerate. If cruise control is already active, use to increase vehicle speed.

SET− : Press briefly to set the speed and activate cruise control. If cruise control is already active, use to decrease speed.

Setting Cruise Control

If is on when not in use, SET− or RES+ could get bumped and go into cruise when not desired. Keep off when cruise control is not being used.

1. Press to turn cruise control on.
2. Get up to the speed desired.
3. Press and release SET−.
4. Remove your foot from the accelerator.

The cruise control indicator on the instrument cluster turns green after cruise control has been set to the desired speed. See *Instrument Cluster* ⇨ *99*.

Resuming a Set Speed

If the cruise control is set at a desired speed and then the brakes are applied or is pressed, if equipped; the cruise control is disengaged without erasing the set speed from memory.

Once the vehicle speed reaches about 40 km/h (25 mph) or more, briefly press RES+. The vehicle returns to the previous set speed.

Increasing Speed While Using Cruise Control

If the cruise control system is already activated:

- Press and hold RES+ until the desired speed is reached, and then release it.
- To increase the vehicle speed in small increments, briefly press RES+. For each press, the vehicle goes about 1.6 km/h (1 mph) faster.

The speedometer reading can be displayed in either English or metric units. See “Options or Settings” under *Instrument Cluster* ⇨ *99*. The increment value used depends on the units displayed.

Reducing Speed While Using Cruise Control

If the cruise control system is already activated:

- Press and hold SET− until the desired lower speed is reached, then release it.
- To decrease the vehicle speed in small increments, briefly press SET−. For each press, the vehicle goes about 1.6 km/h (1 mph) slower.

The speedometer reading can be displayed in either English or metric units. See “Options or Settings” under *Instrument Cluster* ⇨ *99*. The increment value used depends on the units displayed.

Overtaking Another Vehicle While Using Cruise Control

Use the accelerator pedal to increase the vehicle speed. When you take your foot off the pedal, the vehicle slows down to the previously set cruise control speed. While pressing the accelerator pedal or shortly following the release to override cruise control, briefly pressing SET− will result in cruise control set to the current vehicle speed.

Using Cruise Control on Hills

How well the cruise control works on hills depends upon the vehicle speed, load and the steepness of the hills. When going up steep hills, you might have to step on the accelerator pedal to maintain the vehicle speed. When going downhill, you might have to brake or change to a lower gear to keep your speed down. If the brake pedal is applied, cruise control will disengage.

Ending Cruise Control

There are five ways to end cruise control:

- Step lightly on the brake pedal (manual and automatic transmissions).
- Press the clutch pedal for several seconds or shift to Neutral (manual gearboxes).
- Shift to N (Neutral) (automatic transmissions).
- Press , if equipped.
- To turn off cruise control, press .

Erasing Speed Memory

The cruise control set speed is erased from memory if is pressed or if the vehicle is turned off.

Driver Assistance Systems

This vehicle may have features that work together to help avoid crashes or reduce crash damage while driving, reversing, and parking. Read this entire section before using these systems.

⚠ Warning

Do not rely on the Driver Assistance Systems. These systems do not replace the need for paying attention and driving safely. You may not hear or see alerts or warnings provided by these systems. Failure to use proper care when driving may result in injury, death, or vehicle damage. See *Defensive Driving* ⇨ *154*.

Under many conditions, these systems will not:

(Continued)

Warning (Continued)

- Detect children, pedestrians, bicyclists, or animals.
- Detect vehicles or objects outside the area monitored by the system.
- Work at all driving speeds.
- Warn you or provide you with enough time to avoid a crash.
- Work under poor visibility or bad weather conditions.
- Work if the detection sensor is not cleaned or is covered by ice, snow, mud, or dirt.
- Work if the detection sensor is covered up, such as with a sticker, magnet, or metal plate.
- Work if the area surrounding the detection sensor is damaged or not properly repaired.

(Continued)

Warning (Continued)

Complete attention is always required while driving, and you should be ready to take action and apply the brakes and/or steer the vehicle to avoid crashes.

Audible Alert

Some driver assistance features alert the driver of obstacles by beeping. To change the volume of the warning chime, see "Comfort and Convenience" under *Vehicle Personalisation* ⇨ *131*.

Assistance Systems for Parking or Reversing

If equipped, the Rear Vision Camera (RVC), Rear Parking Assist (RPA), and Rear Cross Traffic Alert (RCTA) may help the driver park or avoid objects. Always check around the vehicle when parking or backing.

Rear Vision Camera (RVC)

When the vehicle is shifted into R (Reverse), the RVC displays an image of the area behind the vehicle in the centre console display. The previous screen displays when the vehicle is shifted out of R (Reverse) after a short delay. To return to the previous screen sooner, press a button on the infotainment system, shift into P (Park), or reach a vehicle speed of 8 km/h (5 mph).

Touch MENU to adjust the display brightness while viewing the rear camera display.

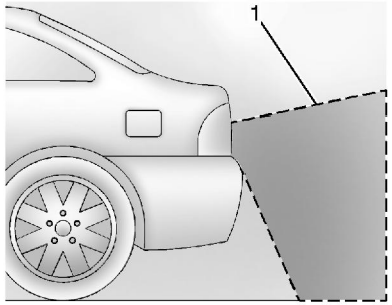

1. View Displayed by the Camera

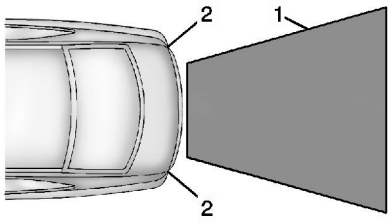

1. View Displayed by the Camera
2. Corners of the Rear Bumper

Displayed images may be farther or closer than they appear. The area displayed is limited and objects that are close to either corner of the bumper or under the bumper do not display.

A warning triangle may display on the RVC screen to show that Rear Parking Assist (RPA) has detected an object. This triangle changes from amber to red and increases in size the closer the object.

⚠ Warning

The camera(s) do not display children, pedestrians, bicyclists, crossing traffic, animals, or any other object outside of the cameras' field of view, below the bumper, or under the vehicle. Shown distances may be different from actual distances. Do not drive or park the vehicle using only these camera(s). Always check behind and around the vehicle before driving. Failure to use proper care may result in injury, death, or vehicle damage.

Parking Assist

With RPA, as the vehicle reverses at speeds of less than 8 km/h (5 mph), the sensors on the rear bumper may detect objects up to 2.5 m (8 ft) behind the vehicle within a zone 25 cm (10 in) high off the ground and below bumper level. These detection distances may be shorter during warmer or humid weather.

Blocked sensors will not detect objects and can also cause false detections. Keep the sensors clean of mud, dirt, snow, ice, and slush; and clean sensors after a car wash in freezing temperatures.

⚠ Warning

The Parking Assist system does not detect children, pedestrians, bicyclists, animals, or objects located below the bumper or that are too close or too far from the vehicle. It is not available at speeds greater than 8 km/h (5 mph). To prevent injury, death or vehicle damage, even with Parking Assist, always check the area around the vehicle and check all mirrors before moving forward or reversing.

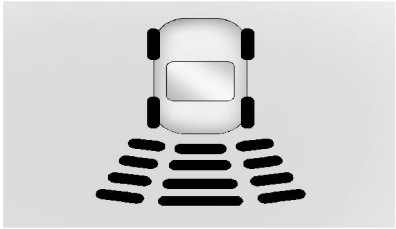

The instrument cluster may have a parking assist display with bars that show "distance to object" and object location information for RPA. As the object gets closer, more bars light up and the bars change colour from yellow to amber to red.

When an object is first detected in the rear, one beep will be heard from the rear. When an object is very close (<0.6 m (2 ft) in the vehicle rear), five beeps will sound from the rear.

Rear Cross Traffic Alert (RCTA)

If equipped, RCTA displays a red warning triangle with a left or right pointing arrow on the RVC screen to warn of traffic coming from the left or right. This system detects objects coming from up to 20 m (65 ft) from the left or right-hand side of the vehicle. When an object is detected, three beeps sound from the left or right, depending on the direction of the detected vehicle.

Turning the Features On or Off

RPA and RCTA can be turned on or off through vehicle personalisation. see "Collision/Detection Systems" under *Vehicle Personalisation* ⇨ *131*.

To turn the rear parking assist symbols or guidance lines on or off, see "Rear Camera" under *Vehicle Personalisation* ⇨ *131*.

Side Blind Zone Alert (SBZA)

If equipped, the SBZA system is a lane-changing aid that assists drivers with avoiding crashes that occur with moving vehicles in the side blind zone (or spot) areas. When the vehicle is in a forward gear, the left or right side mirror display will light up if a moving vehicle is detected in that blind zone. If the indicator is activated

and a vehicle is also detected on the same side, the display will flash as an extra warning not to change lanes. Since this system is part of the Lane Change Alert (LCA) system, read the entire LCA section before using this feature.

Lane Change Alert (LCA)

If equipped, the LCA system is a lane-changing aid that assists drivers with avoiding lane change crashes that occur with moving vehicles in the side blind zone (or spot) areas or with vehicles rapidly approaching these areas from behind. The LCA warning display will light up in the corresponding outside side mirror and will flash if the indicator is on.

⚠ Warning

LCA does not alert the driver to vehicles outside of the system detection zones, pedestrians, bicyclists, or animals. It may not provide alerts when changing

(Continued)

Warning (Continued)

lanes under all driving conditions. Failure to use proper care when changing lanes may result in injury, death, or vehicle damage. Before making a lane change, always check mirrors, glance over your shoulder, and use the indicators.

LCA Detection Zones

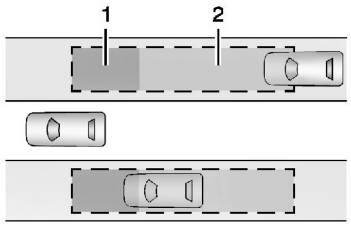

1. SBZA Detection Zone
2. LCA Detection Zone

The LCA sensor covers a zone of approximately one lane over from both sides of the vehicle, or 3.5 m (11 ft). The height of the zone is approximately between 0.5 m (1.5 ft) and 2 m (6 ft) off the ground. The Side Blind Zone Alert (SBZA) warning area starts at approximately the middle of the vehicle and goes back 5 m (16 ft). Drivers are also warned of vehicles rapidly approaching from up to 25 m (82 ft) behind the vehicle.

How the System Works

The LCA symbol lights up in the side mirrors when the system detects a moving vehicle in the next lane over that is in the side blind zone or rapidly approaching that zone from behind. A lit LCA symbol indicates it may be unsafe to change lanes. Before making a lane change, check the LCA display, check mirrors, glance over your shoulder, and use the indicators.



Left Side Mirror Display **Right Side Mirror Display**

When the vehicle is started, both outside mirror LCA displays will briefly come on to indicate the system is operating. When the vehicle is in a forward gear, the left or right side mirror display will light up if a moving vehicle is detected in the next lane over in that blind zone or rapidly approaching that zone. If the indicator is activated in the same direction as a detected vehicle, this display will flash as an extra warning not to change lanes.

LCA can be disabled through vehicle personalisation. See "Collision/Detection Systems" under *Vehicle Personalisation* ⇨ *131*. If LCA is disabled by the driver, the LCA mirror displays will not light up.

When the System Does Not Seem to Work Properly

The LCA system requires some driving for the system to calibrate to maximum performance. This calibration may occur more quickly if the vehicle is driven on a straight motorway with traffic and roadside objects (e.g., guardrails, barriers). During a trip, the LCA system is not operational until the vehicle first reaches a speed of 24 km/h (15 mph).

LCA displays may not come on when overtaking a vehicle quickly or for a stopped vehicle. LCA may alert to objects attached to the vehicle, such as a bicycle, or object extending out to either side of the vehicle. Attached objects may also interfere with the detection of vehicles. This is normal system operation; the vehicle does not need service.

LCA may not always alert the driver to vehicles in the next lane over, especially in wet conditions or when driving on sharp curves. The system does not need to be serviced. The system may light up due to guardrails, signs, trees, shrubs, and other non-moving objects. This is normal system operation; the vehicle does not need service.

LCA may not operate when the LCA sensors in the left or right corners of the rear bumper are covered with mud, dirt, snow, ice, or slush, or in heavy rainstorms. For cleaning instructions, see "Washing the Vehicle" under *Exterior Care* ⇨ *263*. If the DIC still displays the system unavailable message after cleaning both sides of the vehicle toward the rear corners of the vehicle, see your dealer.

If the LCA displays do not light up when moving vehicles are in the side blind zone or rapidly approaching this zone and the system is clean, the system may need service. Take the vehicle to your dealer.

Fuel

Use the recommended fuel for proper vehicle maintenance.

Use unleaded petrol with a posted octane rating of 95 RON or higher. Unleaded petrol rated at 91 RON can be used, but acceleration and fuel economy will be reduced, and an audible knocking noise may be heard. If this occurs, use petrol rated at 95 RON as soon as possible, otherwise the engine could be damaged. If heavy knocking is heard when using unleaded petrol rated at 95 RON, the engine needs service.

Caution

Do not use fuels with any of the following conditions; doing so may damage the vehicle and void its warranty:

- Fuel with any amount of methanol, methylal, and aniline. These fuels can

(Continued)

Caution (Continued)

corrode metal fuel system parts or damage plastic and rubber parts.

- Fuel containing metals such as methylcyclopentadienyl manganese tricarbonyl (MMT), which can damage the emissions control system and spark plugs.
- Fuel with a posted octane rating of less than the recommended fuel. Using this fuel will lower fuel economy and performance, and may decrease the life of the emissions catalyst.

Fuel Additives

Petrol should contain detergent additives that help prevent engine and fuel system deposits from forming. Clean fuel injectors and intake valves will allow the emission control system to work properly. Some petrol does not contain sufficient quantities of additives to keep fuel injectors and intake valves clean. To make up for this lack of detergency, consult your retailer for the GM approved additive treatment. Add this additive to the fuel tank at every engine oil change or every 15 000 km (9 000 mi), whichever occurs first.

Filling the Tank

⚠ Warning

Fuel vapours and fuel fires burn violently and can cause injury or death.

- To help avoid injuries to you and others, read and follow all the instructions on the fuel pump island.
- Turn off the engine when refuelling.
- Keep sparks, flames, and smoking materials away from fuel.
- Do not leave the fuel pump unattended.

(Continued)

Warning (Continued)

- Do not use a mobile phone while refuelling.
- Do not reenter the vehicle while pumping fuel.
- Keep children away from the fuel pump and never let children pump fuel.
- Fuel can spray out if the refuelling nozzle is inserted too quickly. This spray can happen if the tank is nearly full, and is more likely in hot weather. Insert the refuelling nozzle slowly and wait for any hiss noise to stop prior to beginning to flow fuel.

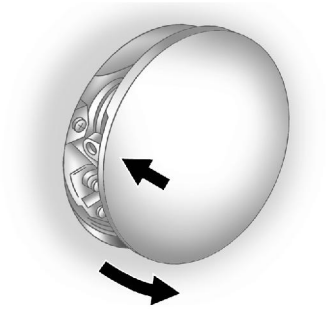

To open the fuel filler flap, push and release the rearward centre edge of the flap. The fuel door is locked when the vehicle doors are locked. Press on the RKE transmitter to unlock.

The vehicle has a capless fuel system and does not have a fuel cap. The filling nozzle must be fully inserted and latched prior to starting fuel flow.

⚠ Warning

Overfilling the fuel tank by more than three clicks of a standard fill nozzle may cause:

- Vehicle performance issues, including engine stalling and damage to the fuel system.
- Fuel spills.
- Potential fuel fires.

Be careful not to spill fuel. Wait a few seconds after you have finished pumping before removing the nozzle. Clean fuel from painted surfaces as soon as possible. See *Exterior Care* ⇨ *263*.

⚠ Warning

If a fire starts while you are refuelling, do not remove the nozzle. Shut off the flow of fuel by shutting off the pump or by notifying the station attendant. Leave the area immediately.

Filling the Tank with a Portable Fuel Can

If the vehicle runs out of fuel and must be filled from a portable petrol can:

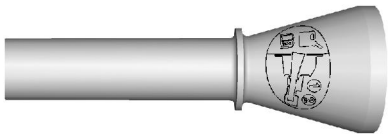

1. Locate the capless funnel adapter from inside the vehicle.
2. Insert and latch the funnel into the capless fuel system.

⚠ Warning

Attempting to refuel without using the funnel adapter may cause fuel spillage and damage the capless fuel system. This could cause a fire and you or others could be badly burned and the vehicle could be damaged.

3. Remove and clean the funnel adapter and return it to the storage location.

Filling a Portable Fuel Container

⚠ Warning

Filling a portable fuel container while it is in the vehicle can cause fuel vapours that can ignite either by static electricity or other means. You or others could be badly burned and the vehicle could be damaged. Always:

- Use approved fuel containers.
- Remove the container from the vehicle, boot, or pickup bed before filling.
- Place the container on the ground.
- Place the nozzle inside the fill opening of the container before dispensing fuel, and

(Continued)

Warning (Continued)

keep it in contact with the fill opening until filling is complete.

- Fill the container no more than 95% full to allow for expansion.
- Do not smoke, light matches, or use lighters while pumping fuel.
- Avoid using mobile phones or other electronic devices.

Trailer Towing

General Towing Information

The vehicle is neither designed nor intended to tow a trailer.

Conversions and Add-Ons

Add-On Electrical Equipment

⚠ Warning

The Data Link Connector (DLC) is used for vehicle service and Emission Inspection/Maintenance testing. See *Malfunction Indicator Lamp (Check Engine Light)* ⇨ *109*. A device connected to the DLC — such as an aftermarket fleet or driver-behaviour tracking device — may interfere with vehicle systems. This could affect vehicle operation and cause a crash. Such devices may also access information stored in the vehicle's systems.

Caution

Some electrical equipment can damage the vehicle or cause components not to work and would not be covered by the vehicle warranty. Always check with your dealer before adding electrical equipment.

Add-on equipment can drain the vehicle's 12-volt battery, even if the vehicle is not operating.

The vehicle has an airbag system. Before attempting to add anything electrical to the vehicle, see *Servicing the Airbag-Equipped Vehicle* ⇨ *74* and *Adding Equipment to the Airbag-Equipped Vehicle* ⇨ *74*.

Vehicle Care

General Information
General Information 203
Accessories and Modifications 203

Vehicle Checks
Doing Your Own Service Work 204
Bonnet 204
Engine Compartment Overview 205
Engine Oil 208
Engine Oil Life System 210
Automatic Transmission Fluid 211
Manual Gearbox Fluid 211
Hydraulic Clutch 211
Engine Air Cleaner/Filter 212
Cooling System 213
Engine Coolant 214
Engine Overheating 218
Washer Fluid 219
Brakes 220
Brake Fluid 221
Battery 222
Rear Axle 223
Starter Switch Check 223
Automatic Transmission Shift Lock Control Function Check 224
Park Brake and P (Park) Mechanism Check 224
Wiper Blade Replacement 224
Windshield Replacement 225

Headlamp Aiming
Headlamp Aiming 225

Bulb Replacement
Bulb Replacement 226
Halogen Bulbs 226
High Intensity Discharge (HID) Lighting 226
Front Indicator Lamps 226
Back-Up Lamps 227
Number Plate Lamp 228
Replacement Bulbs 228

Electrical System
Electrical System Overload ... 228
Fuses and Circuit Breakers ... 229
Engine Compartment Fuse Block 229
Rear Compartment Fuse Block 233

Wheels and Tyres
Tyres 235
All-Season Tyres 236
Winter Tyres 236
Run-Flat Tyres 237
Low-Profile Tyres 238
Summer Tyres 238
Tyre Pressure 239
Tyre Pressure for High-Speed Operation 240
Tyre Pressure Monitor System 240
Tyre Pressure Monitor Operation 241
Tyre Inspection 244
Tyre Rotation 245
When It Is Time for New Tyres 246
Buying New Tyres 247
Different Size Tyres and Wheels 248
Wheel Alignment and Tyre Balance 249
Wheel Replacement 249
Tyre Chains 250
If a Tyre Goes Flat 250
Tyre Sealant and Compressor Kit 251
Storing the Tyre Sealant and Compressor Kit 258

Jump Starting
Jump Starting 258

Towing the Vehicle
Towing the Vehicle 261
Recreational Vehicle Towing 262

Appearance Care
Exterior Care 263
Floor Mats 268

General Information

For service and parts needs, visit your dealer. You will receive genuine parts and trained and supported service people.

Accessories and Modifications

Adding non-dealer accessories or making modifications to the vehicle can affect vehicle performance and safety, including such things as airbags, braking, stability, ride and handling, emissions systems, aerodynamics, durability, and electronic systems like anti-lock brakes, traction control, and stability control. These accessories or modifications could even cause malfunction or damage not covered by the vehicle warranty.

Damage to suspension components caused by modifying vehicle height outside of factory settings will not be covered by the vehicle warranty.

Damage to vehicle components resulting from modifications or the installation or use of non-GM certified parts, including control module or software modifications, is not covered under the terms of the vehicle warranty and may affect remaining warranty coverage for affected parts.

GM Accessories are designed to complement and function with other systems on the vehicle. See your dealer to accessorise the vehicle using genuine GM Accessories installed by a dealer technician.

Also, see *Adding Equipment to the Airbag-Equipped Vehicle* ⇨ *74*.

Vehicle Checks

Doing Your Own Service Work

⚠ Warning

It can be dangerous to work on your vehicle if you do not have the proper knowledge, service manual, tools, or parts. Always follow owner manual procedures and consult the service manual for your vehicle before doing any service work.

If doing some of your own service work, use the proper service manual. It tells you much more about how to service the vehicle than this manual can.

This vehicle has an airbag system. Before attempting to do your own service work, see *Airbag System Check* ⇨ *75*.

Keep a record with all parts receipts and list the mileage and the date of any service work performed.

Caution

Even small amounts of contamination can cause damage to vehicle systems. Do not allow contaminants to contact the fluids, reservoir caps, or dipsticks.

Bonnet

To open the bonnet:

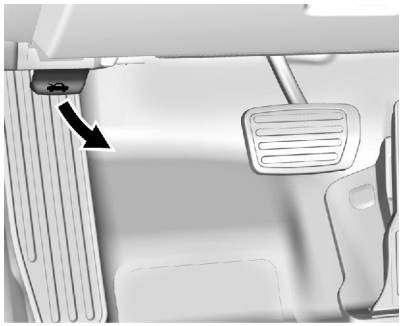

1. Pull the release handle below the instrument panel to the left of the steering wheel and forward of the foot rest.

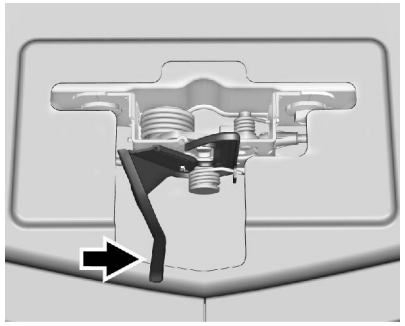

2. Go to the front of the bonnet and push the secondary bonnet release to the right. The lever is near the middle of the bonnet.
3. Lift the bonnet.

To close the bonnet:

1. Before closing the bonnet, be sure all filler caps are on properly. Then lift the bonnet to relieve pressure.
2. Pull the bonnet down on the passenger side to close it firmly. Check to make sure the bonnet is closed and repeat the process if necessary.

Engine Compartment Overview

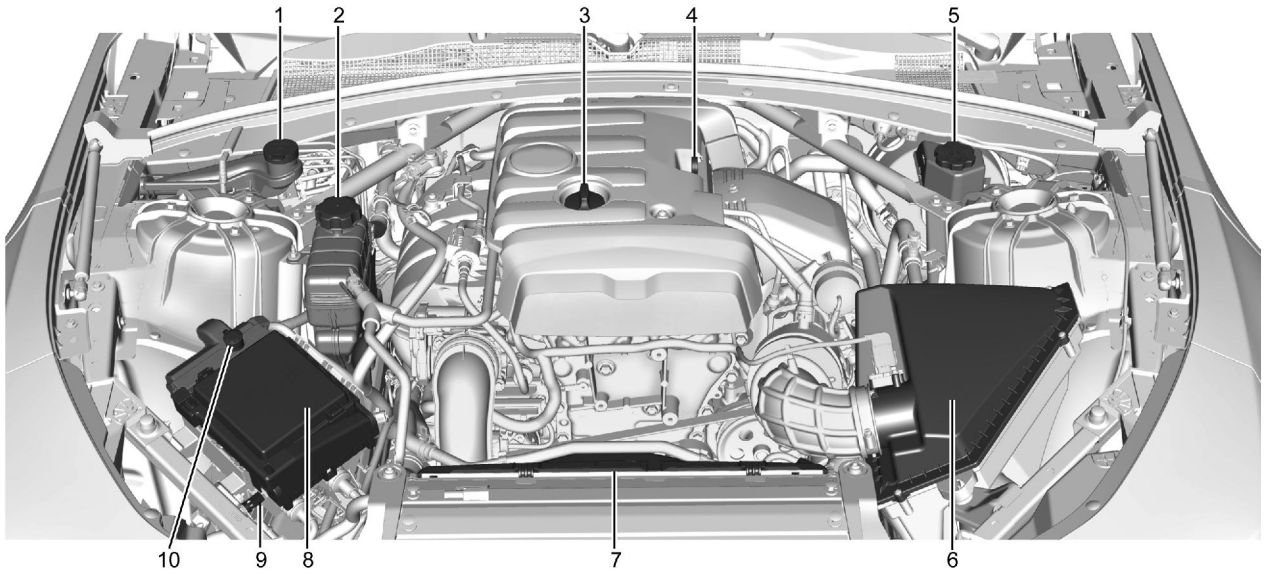

2.0L L4 LTG Engine

1. Windscreen Washer Fluid Reservoir. See *Washer Fluid* ⇨ *219*.
2. Engine Coolant Surge Tank and Pressure Cap. See *Cooling System* ⇨ *213*.
3. Engine Oil Fill Cap. See *Engine Oil* ⇨ *208*.
4. Engine Oil Dipstick. See *Engine Oil* ⇨ *208*.
5. Brake Fluid Reservoir. See *Brake Fluid* ⇨ *221*.
6. *Engine Air Cleaner/Filter* ⇨ *212*.
7. Engine Cooling Fan (Out of View). See *Cooling System* ⇨ *213*.
8. *Engine Compartment Fuse Block* ⇨ *229*.
9. Negative (–) Battery Terminal. See *Jump Starting* ⇨ *258*.
10. Positive (+) Battery Terminal. See *Jump Starting* ⇨ *258*.

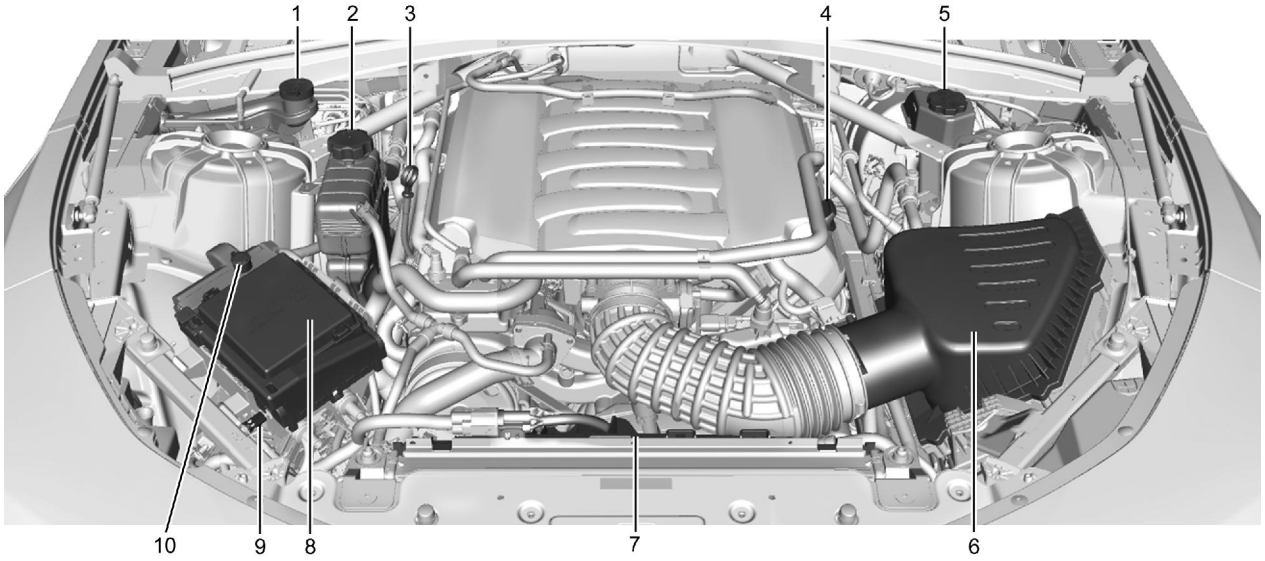

6.2L V8 LT1 Engine

1. Windscreen Washer Fluid Reservoir. See *Washer Fluid* ⇨ *219*.
2. Engine Coolant Surge Tank and Pressure Cap. See *Cooling System* ⇨ *213*.
3. Engine Oil Dipstick. See *Engine Oil* ⇨ *208*.
4. Engine Oil Fill Cap. See *Engine Oil* ⇨ *208*.
5. Brake/Clutch Fluid Reservoir. See *Brake Fluid* ⇨ *221* and *Hydraulic Clutch* ⇨ *211*.
6. *Engine Air Cleaner/Filter* ⇨ *212*.
7. Engine Cooling Fan (Out of View). See *Cooling System* ⇨ *213*.
8. *Engine Compartment Fuse Block* ⇨ *229*.
9. Negative (–) Battery Terminal. See *Jump Starting* ⇨ *258*.
10. Positive (+) Battery Terminal. See *Jump Starting* ⇨ *258*.

Engine Oil

To ensure proper engine performance and long life, careful attention must be paid to engine oil. Following these simple, but important steps will help protect your investment:

- Use engine oil approved to the proper specification and of the proper viscosity grade. See "Selecting the Right Engine Oil" in this section.
- Check the engine oil level regularly and maintain the proper oil level. See "Checking Engine Oil" and "When to Add Engine Oil" in this section.
- Change the engine oil at the appropriate time. See *Engine Oil Life System* ⇨ *210*.
- Always dispose of engine oil properly. See "What to Do with Used Oil" in this section.

Checking Engine Oil

Check the engine oil level regularly (every 650 km (400 mi), especially prior to a long trip. The engine oil dipstick handle is a loop. See *Engine Compartment Overview* ⇨ *205* for the location.

⚠ Warning

The engine oil dipstick handle may be hot; it could burn you. Use a towel or glove to touch the dipstick handle.

If a low oil Driver Information Centre (DIC) message displays, check the oil level.

Follow these guidelines:

- To get an accurate reading, park the vehicle on level ground. Check the engine oil level after the engine has been off for at least two hours. Checking the engine oil level on steep gradients or too soon after engine shutoff can result in incorrect readings. Accuracy improves when checking a cold engine prior to starting. Remove the dipstick and check the level.

- If unable to wait two hours, the engine must be off for at least 15 minutes if the engine is warm, or at least 30 minutes if the engine is not warm. Pull out the dipstick, wipe it with a clean paper towel or cloth, then push it back in all the way. Remove it again, keeping the tip down, and check the level.

When to Add Engine Oil

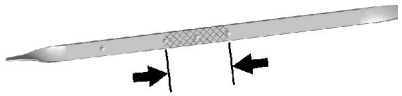

2.0L L4 Engine



6.2L V8 Engine

If the oil is below the cross-hatched area at the tip of the dipstick and the engine has been off for at least 15 minutes, add 1 L (1 qt) of the recommended oil and then recheck the level. See "Selecting the Right Engine Oil" later in this section for an explanation of what kind of oil to use. For engine oil crankcase capacity, see *Capacities and Specifications* ⇨ *277*.

Caution

Do not add too much oil. Oil levels above or below the acceptable operating range shown on the dipstick are harmful to the engine. If you find that you have an oil level above the operating range, i.e., the engine has so much oil that the oil level gets above the cross-hatched area that shows the proper operating range, the engine could be damaged. You should drain out the excess oil or limit driving of the vehicle and seek a service professional to remove the excess amount of oil.

See *Engine Compartment Overview* ⇨ *205* for the location of the engine oil fill cap.

Add enough oil to put the level somewhere in the proper operating range. Push the dipstick all the way back in when done.

Selecting the Right Engine Oil

Selecting the right engine oil depends on both the proper oil specification and viscosity grade. See *Recommended Fluids and Lubricants* ⇨ *273*.

Specification

Ask for and use engine oils that meet the dexos2™ specification.

Engine oils that have been approved by GM as meeting the dexos2 specification are marked with the dexos2 approved logo.

Use of Substitute Engine Oils if dexos2 is unavailable: In the event that dexos2-approved engine oil is not available at an oil change or for maintaining proper oil level, you

may use substitute engine oil that meets ACEA C3 of the appropriate viscosity grade.



Caution
Use only engine oil that is approved to the dexos2 specification or equivalent engine oil as defined in the preceding paragraph. Failure to use the recommended engine oil can result in engine damage not covered by the vehicle warranty.

Viscosity Grade

Use SAE 5W-30 viscosity grade engine oil.

Cold Temperature Operation: In an area of extreme cold, where the temperature falls below −29 °C (−20 °F), an SAE 0W-30 oil may be used. An oil of this viscosity grade will provide easier cold starting for the engine at extremely low temperatures. When selecting an oil of the appropriate viscosity grade, it is recommended to select an oil of the correct specification. See “Specification” earlier in this section.

Engine Oil Additives/Engine Oil Flushes

Do not add anything to the oil. The recommended oils meeting the dexos2 specification are all that is needed for good performance and engine protection.

Engine oil system flushes are not recommended and could cause engine damage not covered by the vehicle warranty.

What to Do with Used Oil

Used engine oil contains certain elements that can be unhealthy for your skin and could even cause cancer. Do not let used oil stay on your skin for very long. Clean your skin and nails with soap and water, or a good hand cleaner. Wash or properly dispose of clothing or rags containing used engine oil. See the manufacturer's warnings about the use and disposal of oil products.

Used oil can be a threat to the environment. If you change your own oil, be sure to drain all the oil from the filter before disposal. Never dispose of oil by putting it in the trash or pouring it on the ground, into sewers, or into streams or bodies of water. Recycle it by taking it to a place that collects used oil.

Engine Oil Life System

When to Change Engine Oil

This vehicle has a computer system that indicates when to change the engine oil and filter. This is based on a combination of factors which include engine revolutions, engine temperature, and miles driven. Based on driving conditions, the mileage at which an oil change is indicated can vary considerably. For the oil life system to work properly, the system must be reset every time the oil is changed.

When the system has calculated that oil life has been diminished, it indicates that an oil change is necessary. A CHANGE ENGINE OIL SOON message comes on. See *Engine Oil Messages* ⇨ *124*. Change the oil as soon as possible within the next 1 000 km (600 mi). It is possible that, if driving under the best conditions, the oil life system might indicate that an oil change is not necessary for up to a year. The engine oil and filter must be changed at least once a year and, at this time, the system must be reset. Your dealer has trained service people who will perform this work and reset the system. It is also important to check the oil regularly over the course of an oil drain interval and keep it at the proper level.

If the system is ever reset accidentally, the oil must be changed at 5 000 km (3,000 mi) since the last oil change. Remember to reset the oil life system whenever the oil is changed.

After you change the oil, the oil life monitor will need to be reset. See your dealer for service.

See REMAINING OIL LIFE under *Driver Information Centre (DIC)* ⇨ *116* for information on the engine oil life monitor.

Automatic Transmission Fluid

How to Check Automatic Transmission Fluid

It is not necessary to check the transmission fluid level.
A transmission fluid leak is the only reason for fluid loss. If a leak occurs, take the vehicle to your dealer and have it repaired as soon as possible.

The vehicle is not equipped with a transmission fluid level dipstick. There is a special procedure for checking and changing the transmission fluid. Because this procedure is difficult, this should be done at the dealer. Contact your dealer for additional information.

Change the fluid and filter at the intervals listed in *Scheduled Maintenance* ⇨ *270*, and be sure to use the fluid listed in *Recommended Fluids and Lubricants* ⇨ *273*.

Manual Gearbox Fluid

It is not necessary to check the manual gearbox fluid level.
A transmission fluid leak is the only reason for fluid loss. If a leak occurs, take the vehicle to your dealer and have it repaired as soon as possible. See *Recommended Fluids and Lubricants* ⇨ *273* for the proper fluid to use.

Hydraulic Clutch

For vehicles with a manual transmission, it is not necessary to regularly check brake/clutch fluid unless there is a leak suspected. Adding fluid will not correct a leak. A fluid loss in this system could indicate a problem. Have the system inspected and repaired.

When to Check and What to Use

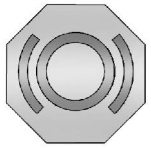

The brake/hydraulic clutch fluid reservoir cap has this symbol on it. See *Engine Compartment Overview* ⇨ *205* for reservoir location. The common hydraulic clutch and brake master cylinder fluid reservoir is filled with brake fluid as indicated on the reservoir cap. See *Brake Fluid* ⇨ *221* for brake fluid to use.

How to Check and Add Fluid

Visually check the brake/clutch fluid reservoir to make sure the fluid level is at the MIN (minimum) line on the side of the reservoir. The brake/hydraulic clutch fluid system should be closed and sealed.

Do not remove the cap to check the fluid level or to top-off the fluid level. Remove the cap only when necessary to add the proper fluid until the level reaches the MIN line.

Engine Air Cleaner/Filter

The engine air cleaner/filter is in the engine compartment on the driver side of the vehicle. See *Engine Compartment Overview* ⇨ *205* for location.

When to Inspect the Engine Air Cleaner/Filter

For intervals on changing and inspecting the engine air filter, see *Scheduled Maintenance* ⇨ *270*.

How to Inspect the Engine Air Cleaner/Filter

Do not start the engine or have the engine running with the engine air cleaner/filter housing open. Before removing the engine air cleaner/filter, make sure that the engine air cleaner/filter housing and nearby components are free of dirt and debris. Remove the engine air cleaner/filter. Lightly tap and shake the engine air cleaner/filter (away from the vehicle), to release loose dust and dirt. Inspect the engine air cleaner/filter for damage, and replace if damaged. Do not clean the engine air cleaner/filter or components with water or compressed air.

To inspect or replace the engine air cleaner/filter:

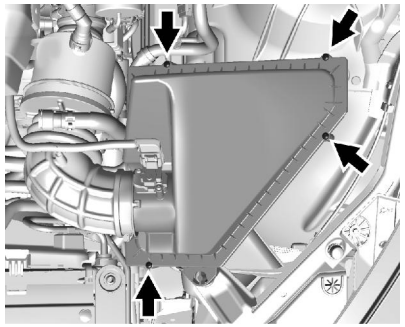

2.0L L4 LTG Engine

1. Remove the four screws and lift the cover assembly.
2. Inspect or replace the air cleaner/filter.

3. Reverse Steps 1–2 to reinstall the housing cover.

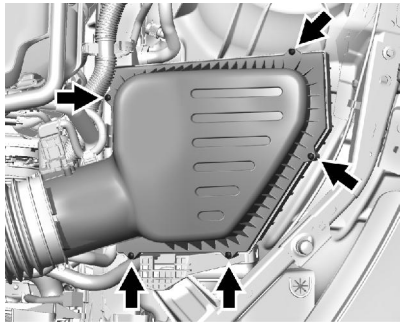

6.2L V8 LT1 Engine

1. Remove the five screws and lift the cover assembly.
2. Inspect or replace the air cleaner/filter.
3. Reverse Steps 1–2 to reinstall the housing cover.

⚠ Warning

Operating the engine with the air cleaner/filter off can cause you or others to be burned. The air

(Continued)

Warning (Continued)

cleaner not only cleans the air; it helps to stop flames if the engine backfires. Use caution when working on the engine and do not drive with the air cleaner/filter off.

Caution

If the air cleaner/filter is off, dirt can easily get into the engine, which could damage it. Always have the air cleaner/filter in place when you are driving.

Cooling System

The cooling system allows the engine to maintain the correct working temperature.

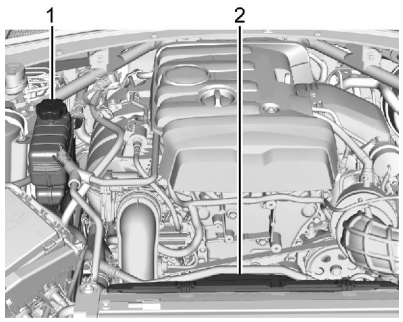

2.0L L4 LTG Engine

1. Engine Coolant Surge Tank and Pressure Cap
2. Engine Cooling Fan (Out of View)

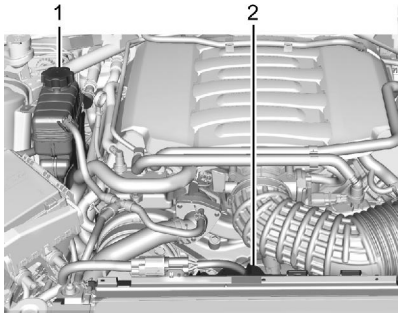

6.2L V8 LT1 Engine

1. Engine Coolant Surge Tank and Pressure Cap
2. Engine Cooling Fan (Out of View)

⚠ Warning

An electric engine cooling fan under the bonnet can start up even when the engine is not running and can cause injury. Keep hands, clothing, and tools away from any underbonnet electric fan.

⚠ Warning

Heater and radiator hoses, and other engine parts, can be very hot. Do not touch them. If you do, you can be burned.

Do not run the engine if there is a leak. If you run the engine, it could lose all coolant. That could cause an engine fire, and you could be burned. Get any leak fixed before you drive the vehicle.

Caution

Using coolant other than DEX-COOL® can cause premature engine, heater core, or radiator corrosion. In addition, the engine coolant could require changing sooner. Any repairs would not be covered by the vehicle warranty. Always use DEX-COOL (silicate-free) coolant in the vehicle.

Engine Coolant

The cooling system in the vehicle is filled with DEX-COOL engine coolant. See *Scheduled Maintenance* ⇨ *270* and *Recommended Fluids and Lubricants* ⇨ *273*.

The following explains the cooling system and how to check and add coolant when it is low. If there is a problem with engine overheating, see *Engine Overheating* ⇨ *218*.

What to Use

⚠ Warning

Adding only plain water or some other liquid to the cooling system can be dangerous. Plain water and other liquids, can boil before the proper coolant mixture will. The coolant warning system is set for the proper coolant mixture. With plain water or the wrong mixture, the engine could get too hot but you would not get the

(Continued)

Warning (Continued)

overheat warning. The engine could catch fire and you or others could be burned. Use a 50/50 mixture of clean, drinkable water and DEX-COOL coolant.

Use a 50/50 mixture of clean drinkable water and DEX-COOL coolant. This mixture:

- Gives freezing protection down to −37 °C (−34 °F), outside temperature.
- Gives boiling protection up to 129 °C (265 °F), engine temperature.
- Protects against rust and corrosion.
- Will not damage aluminium parts.
- Helps keep the proper engine temperature.

Caution

If improper coolant mixture, inhibitors, or additives are used in the vehicle cooling system, the engine could overheat and be damaged. Too much water in the mixture can freeze and crack engine cooling parts. The repairs would not be covered by the vehicle warranty. Use only the proper mixture of engine coolant for the cooling system. See *Recommended Fluids and Lubricants* ⇨ *273*.

Never dispose of engine coolant by putting it in the refuse, pouring it on the ground, or into sewers, streams, or bodies of water. Have the coolant changed by an authorised service centre, familiar with legal requirements regarding used coolant disposal. This will help protect the environment and your health.

Checking Coolant

The vehicle must be on a level surface when checking the coolant level.

It is normal to see coolant moving in the upper coolant hose return line when the engine is running. It is also normal to see bubbles entering the surge tank through the small hose.

Check to see if coolant is visible in the coolant surge tank. If the coolant inside the coolant surge tank is boiling, do not do anything else until it cools down.

If coolant is visible but the coolant level is not at or above the COLD FILL line, add a 50/50 mixture of clean drinkable water and DEX-COOL coolant.

Be sure the cooling system is cool before this is done.

It is normal for the coolant level in the bottom chamber to rise and fall with operating temperature and ambient conditions. Coolant will evaporate from the bottom chamber in normal operation. This will

happen faster when the vehicle is driven for long periods in hot, dry conditions.

If no coolant is visible in the coolant surge tank, add coolant as follows:

How to Add Coolant to the Coolant Surge Tank

Caution

This vehicle has a specific coolant fill procedure. Failure to follow this procedure could cause the engine to overheat and be severely damaged.

If no problem is found, check to see if coolant is visible in the coolant surge tank. If coolant is visible but the coolant level is not at the bottom of the fill neck, add a 50/50 mixture of clean, drinkable water and DEX-COOL coolant at the coolant surge tank, but be sure the cooling system, including the coolant surge tank pressure cap, is cool before you do it.

⚠ Warning

Steam and scalding liquids from a hot cooling system can blow out and burn you badly. Never turn the cap when the cooling system, including the surge tank pressure cap, is hot. Wait for the cooling system and surge tank pressure cap to cool.

⚠ Warning

Adding only plain water or some other liquid to the cooling system can be dangerous. Plain water and other liquids, can boil before the proper coolant mixture will. The coolant warning system is set for the proper coolant mixture. With plain water or the wrong mixture, the engine could get too hot but you would not get the overheat warning. The engine could catch fire and you or others

(Continued)

Warning (Continued)

could be burned. Use a 50/50 mixture of clean, drinkable water and DEX-COOL coolant.

Caution

In cold weather, water can freeze and crack the engine, radiator, heater core, and other parts. Use the recommended coolant and the proper coolant mixture.

⚠ Warning

You can be burned if you spill coolant on hot engine parts. Coolant contains ethylene glycol and it will burn if the engine parts are hot enough. Do not spill coolant on a hot engine.

1. Remove the coolant surge tank pressure cap from the top chamber when the cooling

system, including the coolant surge tank pressure cap and upper radiator hose, is no longer hot.

Turn the pressure cap slowly anticlockwise. If you hear a hiss, wait for that to stop. This will allow any pressure still left to be vented out the discharge hose.

2. Keep turning the pressure cap slowly and remove it. Open the surge tank service port cap to the lower chamber

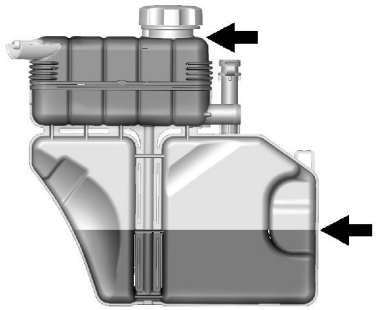

3. Fill the surge tank top chamber with the proper DEX-COOL coolant mixture to the bottom of the fill neck. The top chamber needs to be completely full. Fill the surge tank bottom chamber through the service port to approximately half.
4. With the coolant surge tank pressure cap off and the surge tank service port cap open, start the engine and let it run until you can feel the upper radiator hose getting hot. Watch out for the engine cooling fan.

   By this time, the coolant level inside the coolant surge tank top chamber may be lower. If the level is lower, add more of the proper DEX-COOL coolant mixture to the surge tank top chamber until the level reaches the bottom of the fill neck.
5. Replace the surge tank pressure cap tightly and close the surge tank service port cap.

Caution
If the pressure cap is not tightly installed, coolant loss and possible engine damage may occur. Be sure the cap is properly and tightly secured.

Check the level in the surge tank top and bottom chambers when the cooling system has cooled down. If the coolant is not at the proper levels, repeat Steps 1–3 and reinstall the pressure cap and close the service port. If the coolant still is not at the proper levels when the system cools down again, see your dealer.

Engine Overheating

The vehicle has several indicators to warn of the engine overheating.

There is an engine coolant temperature gauge on the instrument cluster. See *Engine Coolant Temperature Gauge* ⇨ *105*. The vehicle may also display a message on the Driver Information Centre (DIC). See *Engine Cooling System Messages* ⇨ *123*.

If the decision is made not to lift the bonnet when this warning appears, get service help right away.

If the decision is made to lift the bonnet, make sure the vehicle is parked on a level surface.

Then check to see if the engine cooling fan is running. If the engine is overheating, the fan should be running. If it is not, do not continue to run the engine. Have the vehicle serviced.

Caution

Running the engine without coolant may cause damage or a fire. Vehicle damage would not be covered by the vehicle warranty.

If Steam Is Coming from the Engine Compartment

⚠ Warning

Steam from an overheated engine can burn you badly, even if you just open the bonnet. Stay away from the engine if you see or hear steam coming from it. Just turn it off and get everyone away from the vehicle until it cools down. Wait until there is no sign of steam or coolant before you open the bonnet.

If you keep driving when the engine is overheated, the liquids in it can catch fire. You or others could be badly burned. Stop the

(Continued)

Warning (Continued)

engine if it overheats, and get out of the vehicle until the engine is cool.

If Steam Is Coming from the Engine Compartment with no Overheat Warning

The bonnet extractor, if equipped, is functional. It will allow water from rain and car washes to enter the engine compartment and contact hot surfaces. If steam is coming from the bonnet extractor with no accompanying overheat warning, no action is required.

If No Steam Is Coming from the Engine Compartment

If an engine overheat warning is displayed but no steam can be seen or heard, the problem may not be too serious. Sometimes the engine can get a little too hot when the vehicle:

- Climbs a long hill on a hot day.
- Stops after high-speed driving.

- Idles for long periods in traffic.

If the overheat warning is displayed with no sign of steam:

1. Turn the air conditioning off.
2. Turn the heater on to the highest temperature and to the highest fan speed. Open the windows as necessary.
3. When it is safe to do so, pull off the road, shift to P (Park) or N (Neutral) for an automatic transmission or Neutral for a manual gearbox, and let the engine idle.

If the engine coolant temperature gauge is no longer in the overheated area, the vehicle can be driven. Continue to drive the vehicle slowly for about 10 minutes. Keep a safe vehicle distance from the vehicle in front. If the warning does not come back on, continue to drive normally and have the cooling system checked for proper fill and function.

If the warning continues, pull over, stop, and park the vehicle right away.

If there is no sign of steam, idle the engine for three minutes while parked. If the warning is still displayed, turn off the engine until it cools down.

Washer Fluid

What to Use

When windscreen washer fluid is needed, be sure to read the manufacturer's instructions before use. If operating the vehicle in an area where the temperature can fall below freezing, use a fluid that has sufficient protection against freezing.

Adding Washer Fluid

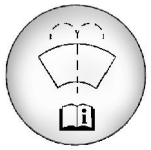

Open the cap with the washer symbol on it. Add washer fluid until the reservoir is full. See *Engine Compartment Overview* ⇨ *205* for reservoir location.

Caution

- Do not use washer fluid that contains any type of water repellent coating. This can cause the wiper blades to chatter or skip.
- Do not use engine coolant (antifreeze) in the windscreen washer. It can damage the windscreen washer system and paint.
- Do not mix water with ready-to-use washer fluid. Water can cause the solution to freeze and damage the washer fluid tank and other parts of the washer system.

(Continued)

Caution (Continued)

- When using concentrated washer fluid, follow the manufacturer instructions for adding water.
- Fill the washer fluid tank only three-quarters full when it is very cold. This allows for fluid expansion if freezing occurs, which could damage the tank if it is completely full.

Brakes

Disc brake pads have built-in wear indicators that make a high-pitched warning sound when the brake pads are worn and new pads are needed. The sound can come and go or can be heard all the time when the vehicle is moving, except when applying the brake pedal firmly.

⚠ Warning

The brake wear warning sound means that soon the brakes will not work well. That could lead to a crash. When the brake wear warning sound is heard, have the vehicle serviced.

Caution

Continuing to drive with worn-out brake pads could result in costly brake repair.

Some driving conditions or climates can cause a brake squeal when the brakes are first applied or lightly applied. This does not mean something is wrong with the brakes.

If equipped with high performance brake linings, there could be an increased build-up of brake dust as well as minor noises as compared to standard brake linings.

Properly torqued wheel nuts are necessary to help prevent brake pulsation. When tyres are rotated, inspect brake pads for wear and evenly tighten wheel nuts in the proper sequence to torque specifications. See *Capacities and Specifications* ⇨ 277.

Brake pads should be replaced as complete sets.

Brake Pedal Travel

See your dealer if the brake pedal does not return to normal height, or if there is a rapid increase in pedal travel. This could be a sign that brake service may be required.

Replacing Brake System Parts

Always replace brake system parts with new, approved replacement parts. If this is not done, the brakes may not work properly. The braking performance expected can change in many other ways if the wrong replacement brake parts are installed or if parts are improperly installed.

Cold Weather Brake Operation (SS Model)

High performance brake components may bind and clunk when moving the vehicle. This may be noticeable after parking when the brakes have been wet, such as when driving in the rain or after a car wash. This is normal for brakes with high friction pads and does not affect the operation of the brakes. Apply the brakes several times until the binding or clunking stops. Drive the vehicle and apply the brakes several times if it is washed before long-term storage.

Brake Fluid

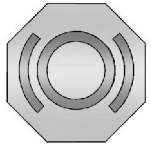

The brake/clutch master cylinder reservoir is filled with GM approved DOT 3 brake fluid as indicated on the reservoir cap. See *Engine Compartment Overview* ⇨ *205* for the location of the reservoir.

Checking Brake Fluid

Place the vehicle in P (Park) or Neutral with the parking brake applied if equipped with a manual gearbox. On a level surface, the brake fluid level should be between the minimum and maximum marks on the brake fluid reservoir.

There are only two reasons why the brake fluid level in the reservoir may go down:

- Normal brake lining wear. When new linings are installed, the fluid level goes back up.
- A fluid leak in the brake/clutch hydraulic system. Have the brake/clutch hydraulic system fixed. With a leak, the brakes will not work well.

Always clean the brake fluid reservoir cap and the area around the cap before removing it.

Do not top up the brake/clutch fluid. Adding fluid does not correct a leak. If fluid is added when the linings are worn, there will be too much fluid when new brake linings are installed. Add or remove fluid, as necessary, only when work is done on the brake/clutch hydraulic system.

⚠ Warning

If too much brake fluid is added, it can spill on the engine and burn, if the engine is hot enough. You or others could be burned, and the vehicle could be damaged. Add brake fluid only when work is done on the brake/clutch hydraulic system.

When the brake/clutch fluid falls to a low level, the brake warning light comes on. See *Brake System Warning Light* ⇨ *111*.

Brake fluid absorbs water over time which degrades the effectiveness of the brake fluid. Replace brake fluid

at the specified intervals to prevent increased stopping distance. See *Scheduled Maintenance* ⇨ *270*.

What to Add

Use only GM approved DOT 3 brake fluid from a clean, sealed container. See *Recommended Fluids and Lubricants* ⇨ *273*.

⚠ Warning

The wrong or contaminated brake fluid could result in damage to the brake system. This could result in the loss of braking leading to a possible injury. Always use the proper GM approved brake fluid.

Caution

If brake fluid is spilled on the vehicle's painted surfaces, the paint finish can be damaged. Immediately wash off any painted surface.

Battery

The original equipment battery is maintenance free. Do not remove the cap and do not add fluid.

The battery is in the boot, under the floor panel. Refer to the replacement number shown on the original battery label when a new battery is needed.

⚠ Warning

Batteries should not be disposed of with regular refuse. Make sure that you dispose of old batteries in accordance with environmental protection regulations to help protect the environment and your health.



⚠ Warning

Do not use a match or flame near a vehicle's battery. If you need more light, use a torch.

Do not smoke near a vehicle's battery.

When working around a vehicle's battery, shield your eyes with protective glasses.

Keep children away from vehicle batteries.

⚠ Warning

Batteries have acid that can burn you and gas that can explode. You can be hurt badly if you are not careful.

Follow instructions carefully when working around a battery.

Battery posts, terminals and related accessories contain lead and lead compounds which can cause cancer and reproductive harm. Wash hands after handling.

Vehicle Storage

Infrequent Usage: Remove the black, negative (-) cable from the battery to keep the battery from running down.

Extended Storage: Remove the black, negative (-) cable from the battery or use a battery trickle charger.

Rear Axle

When to Check Lubricant

It is not necessary to regularly check the rear axle fluid, unless a leak is suspected or an unusual noise is heard. A fluid loss could indicate a problem. Have it inspected and repaired by your dealer.

Starter Switch Check

⚠ Warning

When you are doing this inspection, the vehicle could move suddenly. If the vehicle moves, you or others could be injured.

1. Before starting this check, be sure there is enough room around the vehicle.
2. Apply both the parking brake and the regular brake. Do not use the accelerator pedal, and be ready to turn off the engine immediately if it starts.
3. For automatic transmission vehicles, try to start the engine in each gear. The vehicle should start only in P (Park) or N (Neutral). If the vehicle starts in any other position, contact your dealer for service.

   For manual gearbox vehicles, put the shift lever in Neutral, push the clutch pedal down halfway and try to start the engine. The vehicle should start only when the clutch pedal is pushed down all the way to the floor. If the vehicle starts when the clutch pedal is not pushed all the way down, contact your dealer for service.

Automatic Transmission Shift Lock Control Function Check

⚠ Warning

When you are doing this inspection, the vehicle could move suddenly. If the vehicle moves, you or others could be injured.

1. Before starting this check, be sure there is enough room around the vehicle. It should be parked on a level surface.
2. Apply the parking brake. Be ready to apply the regular brake immediately if the vehicle begins to move.
3. With the engine off, turn the ignition on, but do not start the engine. Without applying the regular brake, try to move the gear lever out of P (Park) with normal effort. If the shift lever moves out of P (Park), contact your dealer for service.

Park Brake and P (Park) Mechanism Check

⚠ Warning

When you are doing this check, the vehicle could begin to move. You or others could be injured and property could be damaged. Make sure there is room in front of the vehicle in case it begins to roll. Be ready to apply the regular brake at once should the vehicle begin to move.

Park on a fairly steep hill, with the vehicle facing downhill. Keeping your foot on the regular brake, apply the parking brake.

- To check the parking brake's holding ability: With the engine running and the transmission in N (Neutral), slowly remove foot pressure from the regular brake pedal. Do this until the vehicle is held by the parking brake only.
- To check the P (Park) mechanism's holding ability: With the engine running, shift to P (Park). Then release the parking brake followed by the regular brake.

Contact your dealer if service is required.

Wiper Blade Replacement

Windscreen wiper blades should be inspected for wear and cracking.

Replacement blades come in different types and are removed in different ways. For proper type and length, see *Maintenance Replacement Parts* ⇨ *274*.

To replace the windscreen wiper blade:

Caution

Keep the bonnet closed to avoid damaging the paint.

1. Pull the windscreen wiper assembly away from the windscreen.

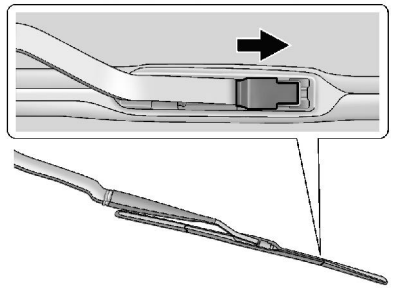

2. Lift up on the latch in the middle of the wiper blade where the wiper arm attaches.
3. With the catch open, pull the wiper blade down towards the windscreen far enough to release it from the J-hooked end of the wiper arm.
4. Remove the wiper blade.

Caution

Allowing the wiper arm to touch the windscreen when no wiper blade is installed could damage

(Continued)

Caution (Continued)

the windscreen. Any damage that occurs would not be covered by the vehicle warranty. Do not allow the wiper arm to touch the windscreen.

5. Reverse Steps 1–3 for wiper blade replacement.

Windshield Replacement

If the Head-Up display (HUD) system and the windscreen need to be replaced, get one that is designed for HUD or the HUD image may look out of focus.

Headlamp Aiming

Headlamp alignment has been preset and should need no further adjustment.

If the vehicle is damaged in a crash, the headlamp alignment may be affected. If adjustment to the headlamps is necessary, see your dealer.

Bulb Replacement

For the proper type of replacement bulbs, see *Replacement Bulbs* ⇨ *228*.

For any bulb-changing procedure not listed in this section, contact your dealer.

Halogen Bulbs

⚠ Warning

Halogen bulbs have pressurised gas inside and can burst if you drop or scratch the bulb. You or others could be injured. Be sure to read and follow the instructions on the bulb package.

High Intensity Discharge (HID) Lighting

⚠ Warning

The High Intensity Discharge (HID) lighting system operates at a very high voltage. If you try to service any of the system components, you could be seriously injured. Have your dealer or a qualified technician service them.

After an HID headlamp bulb has been replaced, the beam might be a slightly different shade than it was originally. This is normal.

Front Indicator Lamps

To replace the turn signal bulb:

1. Open the bonnet. See *Bonnet* ⇨ *204*.

   For the driver's side, the upper surface of the air induction baffle blocks access to the indicator lamp socket. The baffle can be bent out of the way allowing access to the socket.

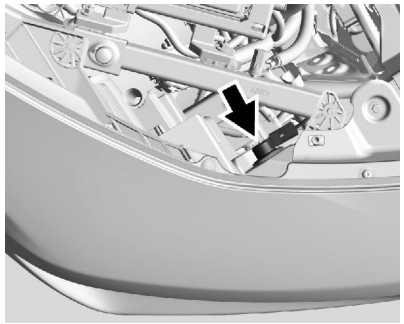

2. Locate the indicator socket bulb on the inboard side of the lamp.

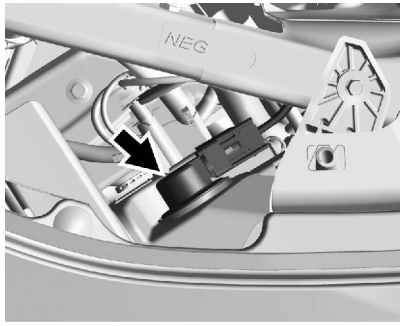

3. Turn the bulb socket anticlockwise to remove it from the headlight assembly.
4. Pull the bulb straight out from the socket.
5. Push the new bulb into the socket and reinstall the socket into the headlamp assembly by turning it clockwise.

Back-Up Lamps

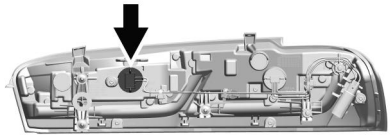

Driver Side Shown, Passenger Side Similar

Only the reversing bulb is replaceable. Removal of the tail light assembly is not necessary to change this bulb.

To replace one of these bulbs:

1. Open the boot. See *Boot* ⇨ *34*.
2. Remove the rubber stop from the closeout panel by turning anticlockwise.
3. Remove the three pushpin fasteners from the closeout panel.
4. Remove the closeout panel.
5. Turn the bulb socket anticlockwise to remove it.
6. Pull the old bulb straight out of the bulb socket.
7. Push the new bulb straight into the bulb socket until it clicks.
8. Turn the bulb socket clockwise to reinstall.
9. Install the closeout panel.
10. Install the three pushpin fasteners and one rubber stop.

Number Plate Lamp

To replace one of these bulbs:

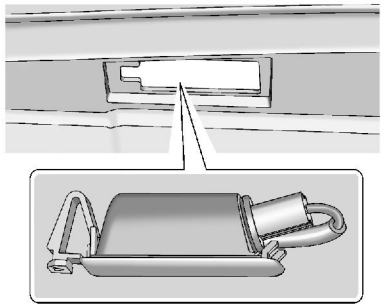

1. Unclip the license plate lamp from the apron opening.
2. Pull the license plate lamp down through the apron opening.
3. Turn the bulb socket counterclockwise and pull the bulb straight out of the lamp socket.
4. Install the new bulb.
5. Push the bulb straight into the socket and turn clockwise to reinstall.
6. Reinstall the license plate lamp by lifting it through the apron opening until the clip is in place.

Replacement Bulbs

Exterior Lamp	Bulb Number
Front Indicator	WY21W
Number Plate	W5WLL
Back-up	W21W

For replacement bulbs not listed here, contact your dealer.

Electrical System

Electrical System Overload

The vehicle has fuses and circuit breakers to protect against an electrical system overload.

When the current electrical load is too heavy, the circuit breaker opens and closes, protecting the circuit until the current load returns to normal or the problem is fixed. This greatly reduces the chance of circuit overload and fire caused by electrical problems.

Fuses and circuit breakers protect power devices in the vehicle.

Replace a bad fuse with a new one of the identical size and rating.

If there is a problem on the road and a fuse needs to be replaced, the same amperage fuse can be borrowed. Choose some feature of the vehicle that is not needed to use and replace it as soon as possible.

Headlamp Wiring

An electrical overload may cause the lamps to go on and off, or in some cases to remain off. Have the headlamp wiring checked right away if the lamps go on and off or remain off.

Windscreen Wipers

If the wiper motor overheats due to heavy snow or ice, the windscreen wipers will stop until the motor cools and will then restart.

Although the circuit is protected from electrical overload, overload due to heavy snow or ice may cause wiper linkage damage. Always clear ice and heavy snow from the windscreen before using the windscreen wipers.

If the overload is caused by an electrical problem and not snow or ice, be sure to get it fixed.

Fuses and Circuit Breakers

The wiring circuits in the vehicle are protected from short circuits by a combination of fuses and circuit breakers. This greatly reduces the chance of damage caused by electrical problems.

To check a fuse, look at the silver-coloured band inside the fuse. If the band is broken or melted, replace the fuse. Be sure to replace a bad fuse with a new one of the identical size and rating.

Fuses of the same amperage can be temporarily borrowed from another fuse location, if a fuse goes out. Replace the fuse as soon as possible.

To identify and check fuses, circuit breakers, and relays, see *Engine Compartment Fuse Block* ⇨ *229* and *Rear Compartment Fuse Block* ⇨ *233*.

Engine Compartment Fuse Block

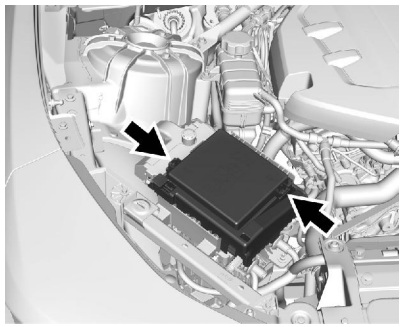

To remove the hinged fuse block cover, press the clip at the front of the cover, and swing it up.

Caution
Do not pull the engine compartment fuse block lever, since it is intended only for service purposes. If pulled, vehicle malfunction may occur.

Caution

Spilling liquid on any electrical component on the vehicle may damage it. Always keep the covers on any electrical component.

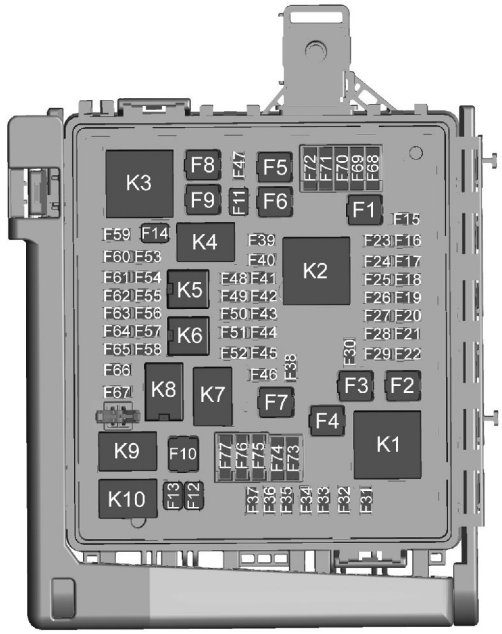

The vehicle may not be equipped with all of the fuses, relays, and features shown.

Fuse	Usage
F1	ABS pump
F2	-

Fuse	Usage
F3	Driver power seat
F4	Cooling fan
F5	Passenger power seat
F6	-
F7	-
F8	-
F9	-
F10	-
F11	-
F12	Front wiper
F13	Starter
F14	Brake vacuum pump
F15	-
F16	Heated seat
F17	Passenger window
F18	Body control module 4
F19	Airbag module/AOS
F20	OnStar/Navigation (if equipped)
F21	Body control module 6
F22	ABS valve
F23	-
F24	-
F25	Steering column lock
F26	Body control module 2
F27	-
F28	Body control module 3
F29	Body control module 8
F30	Windscreen wiper
F31	Right HID headlamp
F32	Left HID headlamp
F33	-
F34	Horn
F35	-
F36	Left main-beam headlight
F37	Right main-beam headlight
F38	Headlight levelling
F39	-
F40	Rear electrical centre/Ignition
F41	Malfunction indicator lamp/Ignition
F42	Instrument panel body/Ignition
F43	Exhaust valve/Active fuel management
F44	AOS display/Ignition
F45	Sunroof
F46	Body control module 7
F47	CGM
F48	-
F49	Heated steering wheel
F50	Fuel system control module/Ignition
F51	Exhaust valve ptsq

Fuse	Usage
F52	A/C clutch
F53	-
F54	Coolant pump
F55	-
F56	-
F57	Engine control module/Ignition
F58	Transmission control module/Ignition
F59	-
F60	Transmission control module battery
F61	MAF/O2 sensor
F62	Ignition coils – odd
F63	Non-walk/O2 sensor
F64	Ignition coils – even
F65	-

Fuse	Usage
F66	Engine control module 1
F67	Engine control module 2
F68	-
F69	-
F70	-
F71	-
F72	-
F73	-
F74	-
F75	-
F76	-
F77	-

Relays	Usage
K1	-
K2	Run/Crank
K3	-
K4	Vacuum pump
K5	-
K6	Coolant pump
K7	Engine control module
K8	A/C control
K9	-
K10	Starter

Rear Compartment Fuse Block

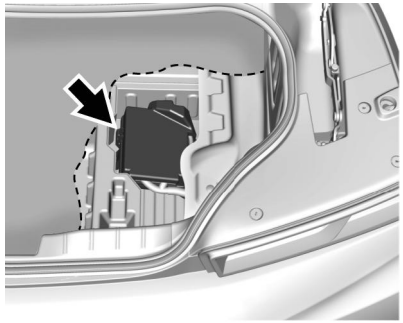

The rear compartment fuse block is located on the right side under the boot load floor.

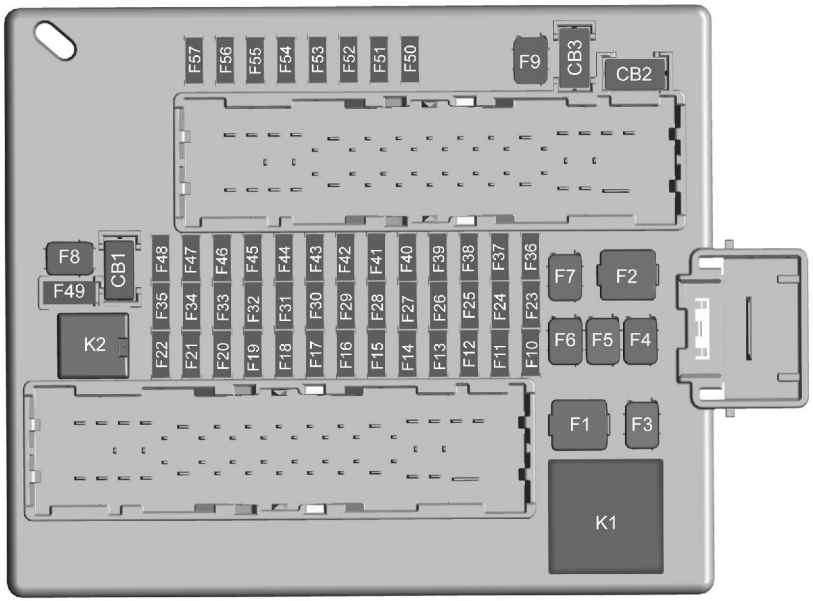

The vehicle may not be equipped with all of the fuses, relays, and features shown.

Fuses	Usage
F1	Rear demister
F2	Front HVAC

Fuses	Usage
F3	Electric parking brake
F4	-
F5	-
F6	Rear drive control module
F7	Right window 1
F8	-
F9	Left window 1
F10	Heated mirror 1
F11	-
F12	Heated steering wheel
F13	-
F14	HVAC control
F15	-
F16	Display
F17	Camera
F18	-
F19	Front ventilated seat 1
F20	Reversing lamps
F21	-
F22	-
F23	Body control module 1
F24	-
F25	-
F26	-
F27	RGB lights
F28	Passive entry/ Passive start battery 1
F29	Data link connector
F30	Canister vent
F31	Memory seat module folding top
F32	Memory seat module
F33	Wireless charger
F34	Engine control module battery
F35	Fuel pump/Fuel system control module
F36	-
F37	Electric steering column lock
F38	Mirror window module
F39	Rear closure
F40	-
F41	Battery regulated voltage control
F42	SADS
F43	-
F44	Folding top solenoid
F45	Amplifier
F46	FPPM 22
F47	Shunt
F48	-
F49	Steering wheel
F50	Interior rear-view mirror

Fuses	Usage
F51	Camera module
F52	Rear parking assist
F53	Electronic limited-slip differential (if equipped)
F54	Side blind zone alert
F55	Radio controls
F56	Theft deterrent/ Universal remote system (if equipped)
F57	-

Relays	Usage
K1	Rear demister
K2	Fuel pump

Circuit Breaker	Usage
CB1	-
CB2	Retained accessory power
CB3	-

Wheels and Tyres

Tyres

Every new GM vehicle has high-quality tyres made by a leading tyre manufacturer. See the warranty manual for information regarding the tyre warranty and where to get service. For additional information refer to the tyre manufacturer.

⚠ Warning

- Poorly maintained and improperly used tyres are dangerous.
- Overloading the tyres can cause overheating as a result of too much flexing. There could be a blowout and a serious crash. See *Vehicle Load Limits* ⇨ *164*.

(Continued)

Warning (Continued)

- Underinflated tyres pose the same danger as overloaded tyres. The resulting crash could cause serious injury. Check all tyres frequently to maintain the recommended pressure. Tyre pressure should be checked when the tyres are cold.
- Overinflated tyres are more likely to be cut, punctured, or broken by a sudden impact - such as when hitting a pothole. Keep tyres at the recommended pressure.
- Worn or old tyres can cause a crash. If the tread is badly worn, replace them.

(Continued)

Warning (Continued)

- Replace any tyres that have been damaged by impacts with potholes, curbs, etc.
- Improperly repaired tyres can cause a crash. Only the dealer or an authorised tyre service centre should repair, replace, dismount, and mount the tyres.
- Do not spin the tyres in excess of 56 km/h (35 mph) on slippery surfaces such as snow, mud, ice, etc. Excessive spinning may cause the tyres to explode.

See *Tyre Pressure for High-Speed Operation* ⇨ *240* for inflation pressure adjustment for high-speed driving.

All-Season Tyres

This vehicle may come with all-season tyres. These tyres are designed to provide good overall performance on most road surfaces and weather conditions. Original equipment tyres designed to GM's specific tyre performance criteria have a TPC specification code moulded onto the sidewall. Original equipment all-season tyres can be identified by the last two characters of this TPC code, which will be "MS."

Consider installing winter tyres on the vehicle if frequent driving on snow or ice-covered roads is expected. All-season tyres provide adequate performance for most winter driving conditions, but they may not offer the same level of traction or performance as winter tyres on snow or ice-covered roads. See *Winter Tyres* ⇨ *236*.

Winter Tyres

This vehicle was not originally equipped with winter tyres. Winter tyres are designed for increased traction on snow and ice-covered roads. Consider installing winter tyres on the vehicle if frequent driving on ice or snow covered roads is expected. See your dealer for details regarding winter tyre availability and proper tyre selection. Also, see *Buying New Tyres* ⇨ *247*.

With winter tyres, there may be decreased dry road traction, increased road noise and shorter tread life. After changing to winter tyres, be alert for changes in the vehicle handling and braking.

If using winter tyres:

- Use tyres of the same brand and tread type on all four wheel positions.
- Use only radial ply tyres of the same size, load range and speed rating as the original equipment tyres.

Winter tyres with the same speed rating as the original equipment tyres may not be available for H, V, W, Y and ZR speed rated tyres. If winter tyres with a lower speed rating are chosen, never exceed the tyre's maximum speed capability.

Run-Flat Tyres

This vehicle, when new, may have had run-flat tyres. There is no spare tyre, no tyre changing equipment and no place to store a tyre in the vehicle.

The vehicle also has a Tyre Pressure Monitor System (TPMS) that indicates a loss of tyre pressure in any of the tyres.

⚠ Warning

If the low tyre warning light displays on the instrument cluster, the handling capabilities will be reduced during severe manoeuvres. Driving too fast could cause loss of control and

(Continued)

Warning (Continued)

you or others could be injured. Do not drive over 90 km/h (55 mph) when the low tyre warning light is displayed. Drive cautiously and check the tyre pressures as soon as possible.

Run-flat tyres can be driven on with no air pressure. There is no need to stop on the side of the road to change the tyre. Continue driving; however, do not drive too far or too fast. Driving on the tyre may not be possible if there is permanent damage. To prevent permanent damage, keep speed below 80 km/h (50 mph). With a light load the vehicle can be driven up to 100 km (60 mi); with a moderate load 80 km (50 mi); and a heavy load 45 km (25 mi). As soon as possible, contact the nearest authorised GM or run-flat servicing facility for inspection and repair or replacement.

When driving on a deflated run-flat tyre, avoid potholes and other road hazards that could damage the tyre and/or wheel beyond repair. When a tyre has been damaged, or driven any distance while deflated, check with an authorised run-flat tyre service centre to determine whether the tyre can be repaired or should be replaced. To maintain the run-flat feature, all replacement tyres must be run-flat tyres.

To locate the nearest GM or run-flat servicing facility, call Customer Assistance.

The valve stems on run-flat tyres have sensors that are part of the TPMS. See *Tyre Pressure Monitor System* ⇨ *240*. These sensors contain batteries that are designed to last for 10 years under normal driving conditions. See your dealer for wheel or sensor replacement.

Caution

Using liquid sealants can damage the tyre valves and tyre pressure monitor sensors in the run-flat tyres. This damage is not covered by the vehicle warranty. Do not use liquid sealants in run-flat tyres.

Low-Profile Tyres

If the vehicle has 245/40R20 or 245/40ZR20 and 275/35ZR20 size tyres, they are classified as low-profile tyres.

Caution

Low-profile tyres are more susceptible to damage from road hazards or curb impact than standard profile tyres. Tyre and/or wheel assembly damage can occur when coming into contact with road hazards like potholes, or sharp edged objects, or when

(Continued)

Caution (Continued)

sliding into a kerb. The warranty does not cover this type of damage. Keep tyres set to the correct inflation pressure and when possible, avoid contact with kerbs, potholes, and other road hazards.

Summer Tyres

High Performance Summer Tyres

This vehicle may come with 245/40ZR20 and 275/35ZR20 high performance summer tyres. These tyres have a special tread and compound that are optimised for maximum dry and wet road performance. This special tread and compound will have decreased performance in cold climates, and on ice and snow. It is recommended that winter tyres be installed on the vehicle if frequent driving at temperatures below approximately 5 °C (40 °F) or on ice or snow covered roads is expected. See *Winter Tyres* ⇨ *236*.

Caution

High performance summer tires have rubber compounds that lose flexibility and may develop surface cracks in the tread area at temperatures below -7 °C (20 °F). Always store high performance summer tires indoors and at temperatures above -7 °C (20 °F) when not in use. If the tires have been subjected to -7 °C (20 °F) or less, let them warm up in a heated space to at least 5 °C (40 °F) for 24 hours or more before being installed or driving a vehicle on which they are installed. Do not apply heat or blow heated air directly on the tyres. Always inspect tyres before use. See *Tyre Inspection* ⇨ *244*.

Tyre Pressure

Tyres need the correct amount of air pressure to operate effectively.

Caution

Neither tyre underinflation nor overinflation is good. Underinflated tyres, or tyres that do not have enough air, can result in:

- Tyre overloading and overheating which could lead to a blowout.
- Premature or irregular wear.
- Poor handling.
- Reduced fuel economy.

Overinflated tyres, or tyres that have too much air, can result in:

- Unusual wear.

(Continued)

Caution (Continued)

- Poor handling.
- Rough ride.
- Needless damage from road hazards.

The Tyre and Loading Information label on the vehicle indicates the original equipment tyres and the correct cold tyre inflation pressures. The recommended pressure is the minimum air pressure needed to support the vehicle's maximum load carrying capacity. See *Vehicle Load Limits* ⇨ *164*.

How the vehicle is loaded affects vehicle handling and ride comfort. Never load the vehicle with more weight than it was designed to carry.

When to Check

Check the tyres once a month or more.

How to Check

Use a good quality pocket-type gauge to check the tyre pressure. Proper tyre inflation cannot be determined by looking at the tyre. Check the tyre inflation pressure when the tyres are cold, meaning the vehicle has not been driven for at least three hours or no more than 1.6 km (1 mi).

Remove the valve cap from the tyre valve stem. Press the tyre gauge firmly onto the valve to get the pressure measurement. If the cold tyre inflation pressure matches the recommended pressure on the Tyre and Loading Information label, no further adjustment is necessary.

If the inflation pressure is low, add air until the recommended pressure is reached. If the inflation pressure in high, press on the metal stem in the centre

of the tyre valve to release air. Re-check the tyre pressure with the tyre gauge.

Put the valve caps back on the valve stems to keep out dirt and moisture and prevent leaks. Use only valve caps designed for the vehicle by GM. TPMS sensors could be damaged and would not be covered by the vehicle warranty.

Tyre Pressure for High-Speed Operation

⚠ Warning

Driving at high speeds, 160 km/h (100 mph) or higher, puts additional strain on tyres. Sustained high-speed driving causes excessive heat build-up and can cause sudden tyre failure. This could cause a crash, and you or others could be killed. Some high-speed rated tyres

(Continued)

Warning (Continued)

require inflation pressure adjustment for high-speed operation. When speed limits and road conditions allow the vehicle to be driven at high speeds, make sure the tyres are rated for high-speed operation, are in excellent condition, and are set to the correct cold tyre inflation pressure for the vehicle load.

Vehicles with 245/40ZR20 95Y and 275/35ZR20 98Y size tyres, have tyres capable of high-speed use.

Make sure vehicles with 245/40ZR20 95Y and 275/35ZR20 98Y size tyres are inflated to the recommended cold inflation pressures before operating the vehicle at speeds over 160 km/h (100 mph). See *Vehicle Load Limits* ⇨ *164* and *Tyre Pressure* ⇨ *239*.

Return the tyres to the recommended cold tyre inflation pressure when high-speed driving has ended. See *Vehicle Load Limits* ⇨ *164* and *Tyre Pressure* ⇨ *239*.

Tyre Pressure Monitor System

Caution

Modifications made to the Tyre Pressure Monitor System (TPMS) by anyone other than an authorised service facility may void authorisation to use the system.

The Tyre Pressure Monitor System (TPMS) uses radio and sensor technology to check tyre pressure levels. The TPMS sensors monitor the air pressure in your vehicle's tyres and transmit tyre pressure readings to a receiver located in the vehicle.

Each tyre, including the spare (if provided), should be checked monthly when cold and inflated to

the inflation pressure recommended by the vehicle manufacturer on the vehicle placard or tyre inflation pressure label. (If your vehicle has tyres of a different size than the size indicated on the vehicle placard or tyre inflation pressure label, you should determine the proper tyre inflation pressure for those tyres.)

As an added safety feature, your vehicle has been equipped with a tyre pressure monitoring system (TPMS) that illuminates a low tyre pressure telltale when one or more of your tyres is significantly under-inflated.

Accordingly, when the low tyre pressure telltale illuminates, you should stop and check your tyres as soon as possible, and inflate them to the proper pressure. Driving on a significantly under-inflated tyre causes the tyre to overheat and can lead to tyre failure. Under-inflation also reduces fuel efficiency and tyre tread life, and may affect the vehicle's handling and stopping ability.

Please note that the TPMS is not a substitute for proper tyre maintenance, and it is the driver's responsibility to maintain correct tyre pressure, even if under-inflation has not reached the level to trigger illumination of the TPMS low tyre pressure telltale.

Your vehicle has also been equipped with a TPMS malfunction indicator to indicate when the system is not operating properly. The TPMS malfunction indicator is combined with the low tyre pressure telltale. When the system detects a malfunction, the telltale will flash for approximately one minute and then remain continuously illuminated. This sequence will continue upon subsequent vehicle start-ups as long as the malfunction exists.

When the malfunction indicator is illuminated, the system may not be able to detect or signal low tyre pressure as intended. TPMS malfunctions may occur for a variety of reasons, including the installation of replacement or alternate tyres or wheels on the vehicle that prevent the TPMS from functioning properly.

Always check the TPMS malfunction telltale after replacing one or more tyres or wheels on your vehicle to ensure that the replacement or alternate tyres and wheels allow the TPMS to continue to function properly.

See *Tyre Pressure Monitor Operation* ⇨ *241* for additional information.

See *Declaration of Conformity* ⇨ *284*.

Tyre Pressure Monitor Operation

This vehicle may have a Tyre Pressure Monitor System (TPMS). The TPMS is designed to warn the driver when a low tyre pressure condition exists. TPMS sensors are mounted onto each tyre and wheel assembly, excluding the spare tyre and wheel assembly. The TPMS sensors monitor the air pressure in the tyres and transmit the tyre pressure readings to a receiver located in the vehicle.



When a low tyre pressure condition is detected, the TPMS illuminates the low tyre pressure warning light on the instrument cluster. If the warning light comes on, stop as soon as possible and inflate the tyres to the recommended pressure shown on the Tyre and Loading Information label. See *Vehicle Load Limits* ⇨ *164*.

A message to check the pressure in a specific tyre displays in the Driver Information Centre (DIC). The low tyre pressure warning light and the DIC warning message come on at each ignition cycle until the tyres are inflated to the correct inflation pressure. Using the DIC, tyre pressure levels can be viewed. For additional information and details about the DIC operation and displays see *Driver Information Centre (DIC)* ⇨ *116*.

The low tyre pressure warning light may come on in cool weather when the vehicle is first started, and then turn off as the vehicle is driven. This could be an early indicator that the air pressure is getting low and needs to be inflated to the proper pressure.

A Tyre and Loading Information label, attached to your vehicle, shows the size of the original equipment tyres and the correct inflation pressure for the tyres when they are cold. See *Vehicle Load Limits* ⇨ *164*, for an example of the Tyre and Loading Information label and its location. Also see *Tyre Pressure* ⇨ *239*.

The TPMS can warn about a low tyre pressure condition but it does not replace normal tyre maintenance. See *Tyre Inspection* ⇨ *244*, *Tyre Rotation* ⇨ *245* and *Tyres* ⇨ *235*.

Caution

Tyre sealant materials are not all the same. A non-approved tyre sealant could damage the TPMS sensors. TPMS sensor damage caused by using an incorrect tyre sealant is not covered by the vehicle warranty. Always use only the GM approved tyre sealant available through your dealer or included in the vehicle.

Factory-installed Tyre Inflator Kits use a GM approved liquid tyre sealant. Using non-approved tyre sealants could damage the TPMS sensors. See *Tyre Sealant and Compressor Kit* ⇨ *251* for information regarding the inflator kit materials and instructions.

TPMS Malfunction Light and Message

The TPMS will not function properly if one or more of the TPMS sensors are missing or inoperable. When the system detects a malfunction, the low tyre warning light flashes for

about one minute and then stays on for the remainder of the ignition cycle. A DIC warning message also displays. The malfunction light and DIC warning message come on at each ignition cycle until the problem is corrected. Some of the conditions that can cause these to come on are:

- One of the road tyres has been replaced with the spare tyre. The spare tyre does not have a TPMS sensor. The malfunction light and DIC message should go off after the road tyre is replaced and the sensor matching process is performed successfully. See “TPMS Sensor Matching Process” later in this section.
- The TPMS sensor matching process was not done or not completed successfully after rotating the tyres. The malfunction light and the DIC message should go off after successfully completing the sensor matching process. See "TPMS Sensor Matching Process" later in this section.
- One or more TPMS sensors are missing or damaged. The malfunction light and the DIC message should go off when the TPMS sensors are installed and the sensor matching process is performed successfully. See your dealer for service.
- Replacement tyres or wheels do not match the original equipment tyres or wheels. Tyres and wheels other than those recommended could prevent the TPMS from functioning properly. See *Buying New Tyres* ⇨ *247*.
- Operating electronic devices or being near facilities using radio wave frequencies similar to the TPMS could cause the TPMS sensors to malfunction.

If the TPMS is not functioning properly it cannot detect or signal a low tyre condition. See your dealer for service if the TPMS malfunction light and DIC message comes on and stays on.

TPMS Sensor Matching Process

Each TPMS sensor has a unique identification code. The identification code needs to be matched to a new tyre/wheel position after rotating the vehicle's tyres or replacing one or more of the TPMS sensors. The TPMS sensor matching process should also be performed after replacing a spare tyre with a road tyre containing the TPMS sensor. The malfunction light and the DIC message should go off at the next ignition cycle. The sensors are matched to the tyre/wheel positions, using a TPMS relearn tool, in the following order: driver side front tyre, passenger side front tyre, passenger side rear tyre, and driver side rear. See your dealer for service or to purchase a relearn tool.

You have two minutes to match the first tyre/wheel position, and five minutes overall to match all four tyre/wheel positions. If it takes longer, the matching process stops and must be restarted.

The TPMS sensor matching process is outlined below:

1. Apply the parking brake.
2. Place the vehicle power mode in ON/RUN/START. See *Ignition Positions* ⇨ *166*.
3. Make sure the Tyre Pressure info display option is turned on. The info displays on the DIC can be turned on and off through the Settings menu. See *Driver Information Centre (DIC)* ⇨ *116*.
4. Use the five-way DIC control on the right side of the steering wheel to scroll to the Tyre Pressure screen under the DIC info page. See *Driver Information Centre (DIC)* ⇨ *116*.
5. Press and hold the SEL button in the centre of the five-way DIC control.

   The horn sounds twice to signal the receiver is in relearn mode and the TYRE LEARNING ACTIVE message displays on the DIC screen.
6. Start with the driver side front tyre.
7. Place the relearn tool against the tyre sidewall, near the valve stem. Then press the button to activate the TPMS sensor. A horn chirp confirms that the sensor identification code has been matched to this tyre and wheel position.
8. Proceed to the passenger side front tyre, and repeat Step 7.
9. Proceed to the passenger side rear tyre, and repeat Step 7.
10. Proceed to the driver side rear tyre, and repeat Step 7. The horn sounds twice to indicate the sensor identification code has been matched to the driver side rear tyre, and the TPMS sensor matching process is no longer active. The TYRE LEARNING ACTIVE message on the DIC display screen goes off.
11. Shut the ignition off.
12. Set all four tyres to the recommended air pressure level as indicated on the Tyre and Loading Information label.

Tyre Inspection

We recommend that the tyres, including the spare tyre, if the vehicle has one, be inspected for signs of wear or damage at least once a month.

Replace the tyre if:

- The indicators at three or more places around the tyre can be seen.
- There is cord or fabric showing through the tyre's rubber.
- The tread or sidewall is cracked, cut, or snagged deep enough to show cord or fabric.
- The tyre has a bump, bulge, or split.

- The tyre has a puncture, cut, or other damage that cannot be repaired well because of the size or location of the damage.

Tyre Rotation

If the vehicle has non-directional tyres, they should be rotated at the intervals specified in the Maintenance Schedule. See *Scheduled Maintenance* ⇨ *270*.

Tyres are rotated to achieve a uniform wear for all tyres. The first rotation is the most important.

Anytime unusual wear is noticed, rotate the tyres as soon as possible, check for proper tyre inflation pressure, and check for damaged tyres or wheels. If the unusual wear continues after the rotation, check the wheel alignment. See *When It Is Time for New Tyres* ⇨ *246* and *Wheel Replacement* ⇨ *249*.

Directional tyres should not be rotated. Each tyre and wheel should be used only in the position it is in. Directional tyres will have an arrow on the tyre indicating the proper direction of rotation or will have “left” or “right” moulded on the sidewall.

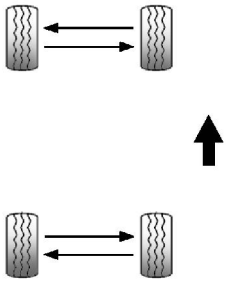

Use this rotation pattern if the vehicle has different size tyres on the front and rear and they are non-directional.

Different tyre sizes should not be rotated front to rear.

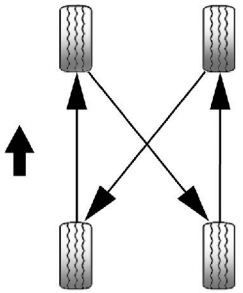

Use this rotation pattern when rotating tyres of the same size installed on all four wheel positions.

If the vehicle has a compact spare tyre, do not include it in the tyre rotation.

Adjust the front and rear tyres to the recommended inflation pressure on the Tyre and Loading Information label after the tyres have been rotated. See *Tyre Pressure* ⇨ *239* and *Vehicle Load Limits* ⇨ *164*.

Reset the Tyre Pressure Monitor System. See *Tyre Pressure Monitor Operation* ⇨ *241*.

Check that all wheel nuts are properly tightened. See "Wheel Nut Torque" under *Capacities and Specifications* ⇨ *277*.

⚠ Warning

Rust or dirt on a wheel, or on the parts to which it is fastened, can make wheel nuts become loose after time. The wheel could come off and cause an accident. When changing a wheel, remove any rust or dirt from places where the wheel attaches to the vehicle. In an emergency, a cloth or a paper towel can be used; however, use a scraper or wire brush later to remove all rust or dirt.

Lightly coat the centre of the wheel hub with wheel bearing grease after a wheel change or tyre rotation to prevent corrosion or rust build-up. Do not get grease on the flat wheel mounting surface or on the wheel nuts or bolts.

When It Is Time for New Tyres

Factors such as maintenance, temperatures, driving speeds, vehicle loading, and road conditions affect the wear rate of the tyres.

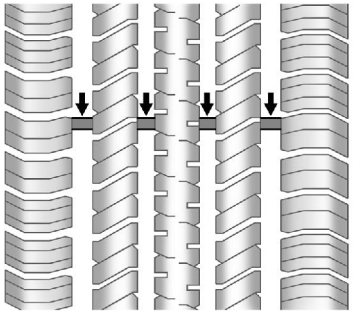

Tread wear indicators are one way to tell when it is time for new tyres. Tread wear indicators appear when the tyres have only 1.6 mm (1/16 in) or less of tread remaining. See *Tyre Inspection* ⇨ *245* and *Tyre Rotation* ⇨ *245*.

The rubber in tyres ages over time. This also applies to the spare tyre, if the vehicle has one, even if it is never used. Multiple factors including temperatures, loading conditions, and inflation pressure maintenance affect how fast ageing takes place. GM recommends that tyres, including the spare if equipped, be replaced after six years, regardless of tread wear. The tyre manufacture date is the last four digits of the DOT Tyre Identification Number (TIN) which is moulded into one side of the tyre sidewall. The first two digits represent the week (01–52) and the last two digits, the year. For example, the third week of the year 2010 would have a four-digit DOT date of 0310.

Vehicle Storage

Tyres age when stored normally mounted on a parked vehicle. Park a vehicle that will be stored for at least a month in a cool, dry, clean

area away from direct sunlight to slow ageing. This area should be free of grease, petrol, or other substances that can deteriorate rubber.

Parking for an extended period can cause flat spots on the tyres that may result in vibrations while driving. When storing a vehicle for at least a month, remove the tyres or raise the vehicle to reduce the weight from the tyres.

Buying New Tyres

GM has developed and matched specific tyres for the vehicle. The original equipment tyres installed were designed to meet General Motors Tyre Performance Criteria Specification (TPC Spec) system rating. When replacement tyres are needed, GM strongly recommends buying tyres with the same TPC Spec rating.

GM's exclusive TPC Spec system considers over a dozen critical specifications that impact the overall performance of the vehicle, including brake system performance, ride and handling, traction control, and tyre pressure monitoring performance. GM's TPC Spec number is moulded onto the tyre's sidewall near the tyre size. If the tyres have an all-season tread design, the TPC Spec number will be followed by MS for mud and snow.

GM recommends replacing worn tyres in complete sets of four. Uniform tread depth on all tyres will help to maintain the performance of the vehicle. Braking and handling performance may be adversely affected if all the tyres are not replaced at the same time. If proper rotation and maintenance have been done, all four tyres should wear out at about the same time. See *Tyre Rotation* ⇨ *245* for information on proper tyre rotation. However, if it is necessary to replace only one axle set of worn tyres, place the new tyres on the rear axle.

Winter tyres with the same speed rating as the original equipment tyres may not be available for H, V, W, Y and ZR speed rated tyres. Never exceed the winter tyre's maximum speed capability when using winter tyres with a lower speed rating.

⚠ Warning

Tyres could explode during improper service. Attempting to mount or dismount a tyre could cause injury or death. Only your dealer or authorised tyre service centre should mount or dismount the tyres.

⚠ Warning

Mixing tyres of different sizes, brands, or types may cause loss of control of the vehicle, resulting in a crash or other vehicle damage. Use the correct size, brand, and type of tyres on all wheels.

⚠ Warning

Using bias-ply tyres on the vehicle may cause the wheel rim flanges to develop cracks after many miles of driving. A tyre and/or wheel could fail suddenly and cause a crash. Use only radial-ply tyres with the wheels on the vehicle.

If the vehicle tyres must be replaced with a tyre that does not have a TPC Spec number, make sure they are the same size, load range, speed rating, and construction (radial) as the original tyres.

Vehicles that have a tyre pressure monitoring system could give an inaccurate low-pressure warning if non-TPC Spec rated tyres are installed. See *Tyre Pressure Monitor System* ⇨ *240*.

The Tyre and Loading Information label indicates the original equipment tyres on the vehicle. See *Vehicle Load Limits* ⇨ *164* for the label location and more information about the Tyre and Loading Information label.

Different Size Tyres and Wheels

If wheels or tyres are installed that are a different size than the original equipment wheels and tyres, vehicle performance, including its braking, ride and handling characteristics, stability, and resistance to rollover may be affected. If the vehicle has electronic systems such as anti-lock brakes, roll-over airbags, roll bars, traction control, electronic stability control, or All-Wheel Drive, the performance of these systems can also be affected.

⚠ Warning

If different sized wheels are used, there may not be an acceptable level of performance and safety if tyres not recommended for those wheels are selected. This increases the chance of a crash and serious injury. Only use GM specific wheel and tyre systems developed for the vehicle, and have them properly installed by a GM certified technician.

See *Buying New Tyres* ⇨ *247* and *Accessories and Modifications* ⇨ *203*.

Wheel Alignment and Tyre Balance

The tyres and wheels were aligned and balanced at the factory to provide the longest tyre life and best overall performance. Adjustments to wheel alignment and tyre balancing are not necessary on a regular basis. Consider an alignment check if there is unusual tyre wear or the vehicle is significantly pulling to one side or the other. Some slight pull to the left or right, depending on the crown of the road and/or other road surface variations such as troughs or ruts, is normal. If the vehicle is vibrating when driving on a smooth road, the tyres and wheels may need to be rebalanced. See your dealer for proper diagnosis.

Wheel Replacement

Replace any wheel that is bent, cracked, or badly rusted or corroded. If wheel nuts keep coming loose, the wheel, wheel bolts, and wheel nuts should be replaced. If the wheel leaks air, replace it.

Some aluminium wheels can be repaired. See your dealer if any of these conditions exist.

Your dealer will know the kind of wheel that is needed.

Each new wheel should have the same load-carrying capacity, diameter, width, offset, and be mounted the same way as the one it replaces.

Replace wheels, wheel bolts, wheel nuts, or Tyre Pressure Monitor System (TPMS) sensors with new GM original equipment parts.

⚠ Warning

Using the wrong replacement wheels, wheel bolts, or wheel nuts can be dangerous. It could affect the braking and handling of the vehicle. Tyres can lose air, and cause loss of control, causing a crash. Always use the correct wheel, wheel bolts, and wheel nuts for replacement.

Caution

The wrong wheel can also cause problems with bearing life, brake cooling, speedometer or odometer calibration, headlamp alignment, rear differential, bumper height, vehicle ground clearance, and tire or tire chain clearance to the body and chassis.

See *If a Tyre Goes Flat* ⇨ *250* for more information.

Used Replacement Wheels

⚠ Warning

Replacing a wheel with a used one is dangerous. How it has been used or how far it has been driven may be unknown. It could fail suddenly and cause a crash. When replacing wheels, use a new GM original equipment wheel.

Tyre Chains

Use tyre chains or other traction devices only when necessary.

Use only 11 mm traction cables that meet or exceed SAE Class “S” requirements and that are the correct size for the 275/40ZR20 tyres. Install them on the rear tyres only, as tightly as possible with the ends securely fastened.

Caution

Do not install traction devices on the front tyres.

Drive slowly and follow the cable manufacturer's instructions. If the cables are contacting the vehicle, stop and retighten them. If the contact continues, slow down until it stops.

Caution

To help avoid damage to the vehicle, drive slowly, do not spin the wheels, and readjust or remove the device if it contacts the vehicle.

If a Tyre Goes Flat

If the vehicle has run-flat tyres, there is no need to stop on the side of the road to change a flat tyre. See *Run-Flat Tyres* ⇨ *237*.

⚠ Warning

Special tools and procedures are required to service a run-flat tyre. If these special tools and procedures are not used, injury or vehicle damage may occur. Always be sure the proper tools and procedures, as described in the service manual, are used.

It is unusual for a tyre to blow out while driving, especially if the tyres are maintained properly. See *Tyres* ⇨ *235*. If air goes out of a tyre, it is much more likely to leak out slowly. But if there is ever a blowout, here are a few tips about what to expect and what to do:

If a front tyre fails, the flat tyre creates a drag that pulls the vehicle toward that side. Take your foot off the accelerator pedal and grip the steering wheel firmly. Steer to maintain lane position, and then gently brake to a stop, well off the road, if possible.

A rear blowout, particularly on a curve, acts much like a skid and may require the same correction as used in a skid. Stop pressing the accelerator pedal and steer to straighten the vehicle. It may be very bumpy and noisy. Gently brake to a stop, well off the road, if possible.

⚠ Warning

Lifting a vehicle and getting under it to do maintenance or repairs is dangerous without the appropriate safety equipment and training. If a jack is provided with the vehicle, it is designed only for changing a flat tyre. If it is used for anything else, you or others could be badly injured or killed if the vehicle slips off the jack. If a jack is provided with the vehicle, only use it for changing a flat tyre.

If this vehicle does not have run-flat tyres and a tyre goes flat, avoid further tyre and wheel damage by driving slowly to a level place, well off the road, if possible.

1. Turn on the hazard warning flashers. See *Hazard Warning Flashers* ⇨ *141*.
2. Apply the parking brake firmly.
3. Put an automatic transmission in P (Park) or a manual gearbox in 1 (First) or R (Reverse).
4. Turn off the ignition.
5. Inspect the flat tyre.

⚠ Warning

Driving on a flat tyre will cause permanent damage to the tyre. Re-inflating a tyre after it has been driven on while severely underinflated or flat may cause a blowout and a serious crash. Never attempt to re-inflate a tyre that has been driven on while severely underinflated or flat. Have your dealer or an authorised tyre service centre repair or replace the flat tyre as soon as possible.

If this vehicle has a tyre sealant kit and the tyre has been separated from the wheel, has damaged sidewalls, or has a puncture larger than 6 mm (0.25 in), the tyre is too severely damaged for the tyre sealant and compressor kit to be effective. If the tyre has a puncture less than 6 mm (0.25 in) in the tread area of the tyre, see *Tyre Sealant and Compressor Kit* ⇨ *251*.

Tyre Sealant and Compressor Kit

⚠ Warning

Idling a vehicle in an enclosed area with poor ventilation is dangerous. Engine exhaust may enter the vehicle. Engine exhaust contains carbon monoxide (CO) which cannot be seen or smelled. It can cause unconsciousness and even death. Never run the engine in an enclosed area that has no fresh air ventilation. For more information, see *Engine Exhaust* ⇨ *172*.

⚠ Warning

Overinflating a tyre could cause the tyre to rupture and you or others could be injured. Be sure to read and follow the tyre sealant and compressor kit instructions and inflate the tyre to its recommended pressure. Do not exceed the recommended pressure.

⚠ Warning

Storing the tyre sealant and compressor kit or other equipment in the passenger compartment of the vehicle could cause injury. In a sudden stop or collision, loose equipment could strike someone. Store the tyre sealant and compressor kit in its original location.

If this vehicle has a tyre sealant and compressor kit, there may not be a spare tyre or tyre changing equipment, and on some vehicles there may not be a place to store a tyre.

The tyre sealant and compressor can be used to temporarily seal punctures up to 6 mm (0.25 in) in the tread area of the tyre. It can also be used to inflate an under inflated tyre.

If the tyre has been separated from the wheel, has damaged sidewalls, or has a large puncture, the tyre is too severely damaged for the tyre sealant and compressor kit to be effective.

Read and follow all of the tyre sealant and compressor kit instructions.

The kit includes:

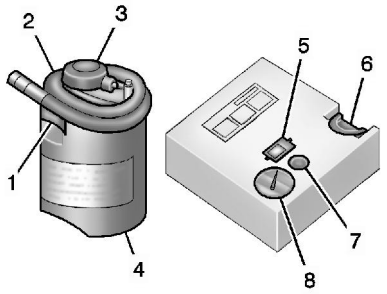

1. Sealant Canister Inlet Valve
2. Sealant/Air Hose
3. Base of Sealant Canister
4. Tyre Sealant Canister
5. On/Off Button
6. Slot on Top of Compressor
7. Pressure Deflation Button
8. Pressure Gauge

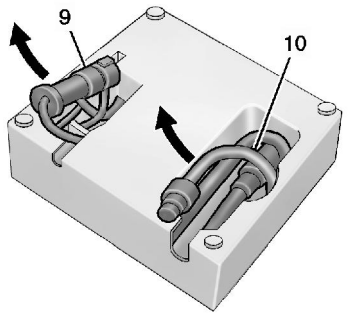

9. Power Plug
10. Air Only Hose

Tyre Sealant

Read and follow the safe handling instructions on the label adhered to the tyre sealant canister (4).

Check the tyre sealant expiration date on the tyre sealant canister. The tyre sealant canister (4) should be replaced before its expiration date. Replacement tyre sealant canisters are available at your local dealer.

There is only enough sealant to seal one tyre. After usage, the tyre sealant canister must be replaced.

Using the Tyre Sealant and Compressor Kit to Temporarily Seal and Inflate a Punctured Tyre

When using the tyre sealant and compressor kit during cold temperatures, warm the kit in a heated environment for five minutes. This will help to inflate the tyre faster.

If a tyre goes flat, avoid further tyre and wheel damage by driving slowly to a level place. Turn on the hazard warning flashers. See *Hazard Warning Flashers* ⇨ *141*.

See *If a Tyre Goes Flat* ⇨ *250* for other important safety warnings.

Do not remove any objects that have penetrated the tyre.

1. Remove the tyre sealant canister (4) and compressor from its storage location. See *Storing the Tyre Sealant and Compressor Kit* ⇨ *258*.
2. Remove the air only hose (10) and the power plug (9) from the bottom of the compressor.
3. Place the compressor on the ground near the flat tyre.

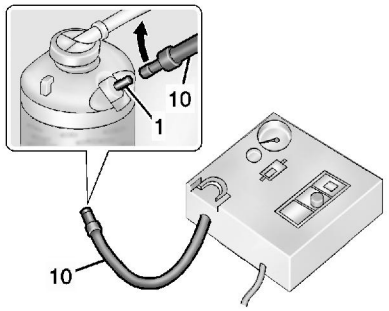

4. Attach the air only hose (10) to the sealant canister inlet valve (1) by turning it clockwise until tight.

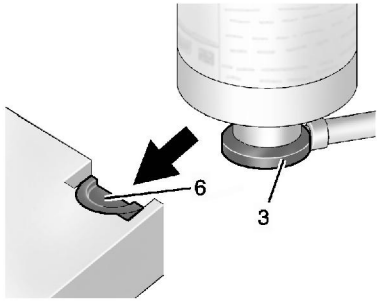

5. Slide the base of the tyre sealant canister (3) into the slot on the top of the compressor (6) to hold it upright.

   Make sure the tyre valve stem is positioned close to the ground so the hose will reach it.

6. Remove the valve stem cap from the flat tyre by turning it anticlockwise.

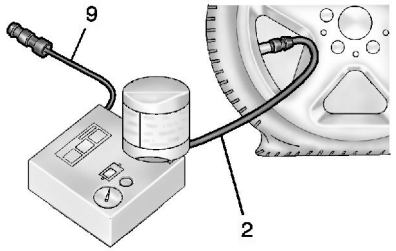

7. Attach the sealant/air hose (2) to the tyre valve stem by turning it clockwise until tight.

8. Plug the power plug (9) into the accessory power outlet in the vehicle. Unplug all items from other accessory power outlets. See *Power Sockets* ⇨ *96*.

   If the vehicle has an accessory power outlet, do not use the cigarette lighter.

   If the vehicle only has a cigarette lighter, use the cigarette lighter.

   Do not pinch the power plug cord in the door or window.

9. Start the vehicle. The vehicle must be running while using the air compressor.

10. Press the on/off button (5) to turn the tyre sealant and compressor kit on.

    The compressor will inject sealant and air into the tyre.

    The pressure gauge (8) will initially show a high pressure while the compressor pushes the sealant into the tyre. Once the sealant is completely dispersed into the tyre, the pressure will quickly drop and start to rise again as the tyre inflates with air only.

11. Inflate the tyre to the recommended inflation pressure using the pressure gauge (8). The recommended inflation pressure can be found on the Tyre and Loading Information label. See *Tyre Pressure* ⇨ *239*.

    The pressure gauge (8) may read higher than the actual tyre pressure while the compressor

is on. Turn the compressor off to get an accurate pressure reading. The compressor may be turned on/off until the correct pressure is reached.

Caution

If the recommended pressure cannot be reached after approximately 25 minutes, the vehicle should not be driven farther. The tyre is too severely damaged and the tyre sealant and compressor kit cannot inflate the tyre. Remove the power plug from the accessory power outlet and unscrew the inflating hose from the tyre valve.

12. Press the on/off button (5) to turn the tyre sealant and compressor kit off.

    The tyre is not sealed and will continue to leak air until the vehicle is driven and the sealant is distributed in the tyre. Therefore, Steps 13–21 must be done immediately after Step 12.

    Be careful while handling the tyre sealant and compressor kit as it could be warm after usage.

13. Unplug the power plug (9) from the accessory power outlet in the vehicle.
14. Turn the sealant/air hose (2) anticlockwise to remove it from the tyre valve stem.
15. Replace the tyre valve stem cap.
16. Remove the tyre sealant canister (4) from the slot on top of the compressor (6).
17. Turn the air only hose (10) anticlockwise to remove it from the tyre sealant canister inlet valve (1).
18. Turn the sealant/air hose (2) clockwise onto the sealant canister inlet valve (1) to prevent sealant leakage.
19. Return the air only hose (10) and power plug (9) back to their original storage location.



20. If the flat tyre was able to inflate to the recommended inflation pressure, remove the maximum speed label from the sealant canister and place it in a highly visible location.

    Do not exceed the speed on this label until the damaged tyre is repaired or replaced.

21. Return the equipment to its original storage location in the vehicle.
22. Immediately drive the vehicle 8 km (5 mi) to distribute the sealant in the tyre.
23. Stop at a safe location and check the tyre pressure. Refer to Steps 1–10 under “Using the

Tyre Sealant and Compressor Kit without Sealant to Inflate a Tyre (Not Punctured)."

If the tyre pressure has fallen more than 68 kPa (10 psi) below the recommended inflation pressure, stop driving the vehicle. The tyre is too severely damaged and the tyre sealant cannot seal the tyre.

If the tyre pressure has not dropped more than 68 kPa (10 psi) from the recommended inflation pressure, inflate the tyre to the recommended inflation pressure.

24. Wipe off any sealant from the wheel, tyre, or vehicle.
25. Dispose of the used tyre sealant canister (4) at a local dealer or in accordance with local state codes and practices.
26. Replace it with a new canister available from your dealer.
27. After temporarily sealing a tyre using the tyre sealant and compressor kit, take the vehicle to an authorised dealer within 161 km (100 mi) of driving to have the tyre repaired or replaced.

Using the Tyre Sealant and Compressor Kit without Sealant to Inflate a Tyre (Not Punctured)

The kit includes:

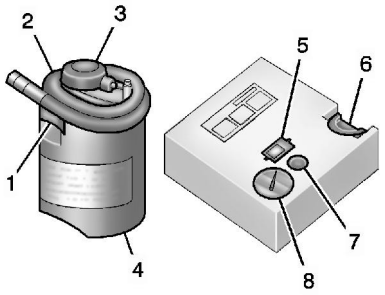

1. Sealant Canister Inlet Valve
2. Sealant/Air Hose
3. Base of Sealant Canister
4. Tyre Sealant Canister
5. On/Off Button
6. Slot on Top of Compressor
7. Pressure Deflation Button
8. Pressure Gauge

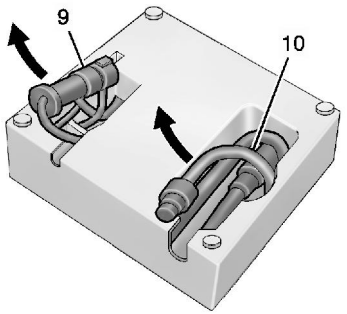

9. Power Plug
10. Air Only Hose

If a tyre goes flat, avoid further tyre and wheel damage by driving slowly to a level place. Turn on the hazard warning flashers. See *Hazard Warning Flashers* ⇨ *141*.

See *If a Tyre Goes Flat* ⇨ *250* for other important safety warnings.

1. Remove the compressor from its storage location. See *Storing the Tyre Sealant and Compressor Kit* ⇨ *258*.

2. Remove the air only hose (10) and the power plug (9) from the bottom of the compressor.
3. Place the compressor on the ground near the flat tyre.

   Make sure the tyre valve stem is positioned close to the ground so the hose will reach it.
4. Remove the valve stem cap from the flat tyre by turning it anticlockwise.
5. Attach the air only hose (10) to the tyre valve stem by turning it clockwise until tight.
6. Plug the power plug (9) into the accessory power outlet in the vehicle. Unplug all items from other accessory power outlets. See *Power Sockets* ⇨ *96*.

   If the vehicle has an accessory power outlet, do not use the cigarette lighter.

   If the vehicle only has a cigarette lighter, use the cigarette lighter.

   Do not pinch the power plug cord in the door or window.
7. Start the vehicle. The vehicle must be running while using the air compressor.
8. Press the on/off button (5) to turn the tyre sealant and compressor kit on.

   The compressor will inflate the tyre with air only.
9. Inflate the tyre to the recommended inflation pressure using the pressure gauge (8). The recommended inflation pressure can be found on the Tyre and Loading Information label. See *Tyre Pressure* ⇨ *239*.

   The pressure gauge (8) may read higher than the actual tyre pressure while the compressor is on. Turn the compressor off to get an accurate pressure reading. The compressor may be turned on/off until the correct pressure is reached.

Caution

If the recommended pressure cannot be reached after approximately 25 minutes, the vehicle should not be driven farther. The tyre is too severely damaged and the tyre sealant and compressor kit cannot inflate the tyre. Remove the power plug from the accessory power outlet and unscrew the inflating hose from the tyre valve.

10. Press the on/off button (5) to turn the tyre sealant and compressor kit off.

    Be careful while handling the compressor as it could be warm after usage.
11. Unplug the power plug (9) from the accessory power outlet in the vehicle.
12. Turn the air only hose (10) anticlockwise to remove it from the tyre valve stem.

13. Replace the tyre valve stem cap.
14. Return the air only hose (10) and power plug (9) back to their original storage location.
15. Return the equipment to its original storage location in the vehicle.

The tyre sealant and compressor kit has accessory adapters in a compartment on the bottom of its housing that can be used to inflate air mattresses, balls, etc.

Storing the Tyre Sealant and Compressor Kit

The tyre sealant and compressor kit is in a bag in the boot.

1. Open the boot. See *Boot* ⇨ *34*.
2. Remove the load floor.

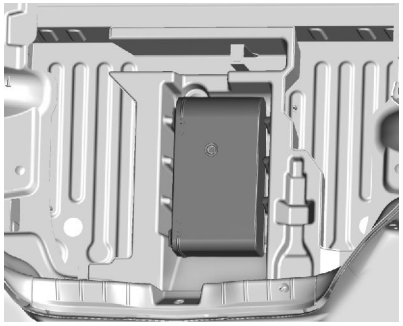

3. Remove the tyre sealant and compressor kit bag from the storage foam.
4. Remove the tyre sealant and compressor kit from the bag.

To store the tyre sealant and compressor kit, reverse the steps.

Jump Starting

For more information about the vehicle battery, see *Battery* ⇨ *222*.

If the battery has run down, try to use another vehicle and some jumper cables to start your vehicle. Be sure to use the following steps to do it safely.

⚠ Warning

Batteries can hurt you. They can be dangerous because:

- They contain acid that can burn you.
- They contain gas that can explode or ignite.
- They contain enough electricity to burn you.

If you do not follow these steps exactly, some or all of these things can hurt you.

Caution

Ignoring these steps could result in costly damage to the vehicle that would not be covered by the vehicle warranty. Trying to start the vehicle by pushing or pulling it will not work, and it could damage the vehicle.

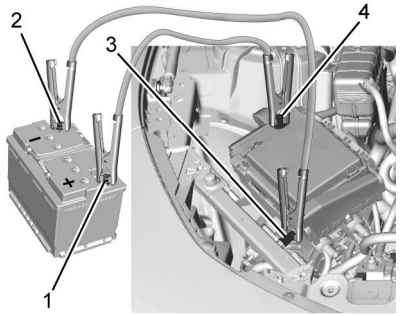

1. Good Battery Positive Post
2. Good Battery Negative Post
3. Discharged Battery Negative Grounding Point
4. Discharged Battery Positive Post

The jump start positive post (1) and negative post (2) are on the battery of the vehicle providing the jump start.

The jump start positive post (4) and the negative grounding point (3) for the discharged battery are on the passenger side of the vehicle.

The positive jump start connection for the discharged battery is under a red cover. Remove the cover to expose the terminal.

1. Check the other vehicle. It must have a 12-volt battery with a negative ground system.

Caution

If the other vehicle does not have a 12-volt system with a negative ground, both vehicles can be damaged. Only use a vehicle that has a 12-volt system with a negative ground for jump starting.

2. Position the two vehicles so that they are not touching.
3. Set the parking brake firmly and put the shift lever in P (Park) with an automatic transmission, or Neutral with a manual gearbox. See *Shifting Into Park* ⇨ *170* with an automatic transmission, or *Parking* ⇨ *171* with a manual gearbox.

Caution

If any accessories are left on or plugged in during the jump starting procedure, they could be damaged. The repairs would not be covered by the vehicle warranty. Whenever possible, turn off or unplug all accessories on either vehicle when jump starting.

4. Set the ignition to OFF. Turn off all lights and accessories in both vehicles, except the hazard warning flashers if needed.

⚠ Warning

An electric fan can start up even when the engine is not running and can injure you. Keep hands, clothing, and tools away from any underbonnet electric fan.

⚠ Warning

Using a match near a battery can cause battery gas to explode. People have been hurt doing this, and some have been blinded. Use a torch if you need more light.

Battery fluid contains acid that can burn you. Do not get it on you. If you accidentally get it in your eyes or on your skin, flush the place with water and get medical help immediately.

⚠ Warning

Fans or other moving engine parts can injure you badly. Keep your hands away from moving parts once the engine is running.

5. Connect one end of the red positive (+) cable to the positive (+) terminal on the discharged battery.
6. Connect the other end of the red positive (+) cable to the positive (+) terminal of the good battery.
7. Connect one end of the black negative (–) cable to the negative (–) terminal of the good battery.
8. Connect the other end of the black negative (–) cable to the negative (–) grounding point for the discharged battery.
9. Start the engine in the vehicle with the good battery and run the engine at idle speed for at least four minutes.
10. Try to start the vehicle that had the dead battery. If it will not start after a few tries, it probably needs service.

Caution

If the jump leads are connected or removed in the wrong order, electrical shorting may occur and damage the vehicle. The repairs would not be covered by the vehicle warranty. Always connect and remove the jump leads in the correct order, making sure that the cables do not touch each other or other metal.

Jump Lead Removal

Reverse the sequence exactly when removing the jump leads.

After starting the disabled vehicle and removing the jump leads, allow it to idle for several minutes.

Towing the Vehicle

Caution

Incorrectly towing a disabled vehicle may cause damage. The damage would not be covered by the vehicle warranty.

Do not lash or hook to suspension components. Use the proper straps around the tyres to secure the vehicle.

Use only a flatbed tow truck for towing a disabled vehicle. Never use a sling type lift or damage will occur. Use ramps to help reduce approach angles if necessary. A towed vehicle should have its drive wheels off the ground.

Consult a professional towing service if the disabled vehicle must be towed.

For HP vehicles, see the HP supplement.

To tow the vehicle behind another vehicle for recreational purposes, such as behind a motor home, see *Recreational Vehicle Towing* ⇨ *262*.

Removal and Installation – Tow Hook Covers

If the vehicle is equipped with a tow eye, only use the tow eye to pull the vehicle onto a flatbed car carrier from a flat road surface. Do not use the tow eye to pull the vehicle from snow, mud, or sand.

The tow eye is in the rear compartment storage area.

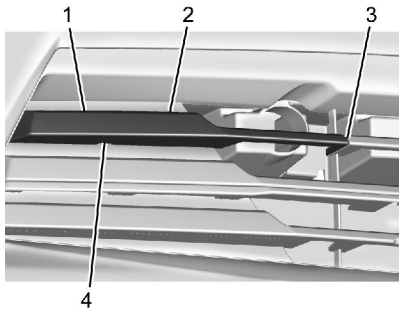

L4 Models

1. Upper Tab
2. Upper Tab
3. Middle Tab
4. Slot

To remove the tow hook covers:

1. Place a tool in the slot and pry the cover loose. Use care to not scratch the cover or grille.
2. Remove the tow hook cover to expose the socket.
3. Install the tow eye into the socket by turning it clockwise until it stops.

To install the tow hook covers:

1. Remove the tow eye.
2. Align the cover using the middle tab.
3. Place the cover on the grille and press the upper tabs.
4. Push the area around the slot to engage.

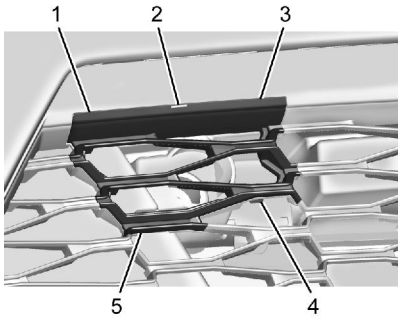

V8 Models

1. Upper Tab
2. Gap
3. Upper Tab
4. Lower Tab
5. Lower Tab

To remove the tow hook covers:

1. Place a tool in the gap and pry the cover loose. Use care to not scratch the cover or grille.
2. Remove the tow hook cover to expose the socket.
3. Install the tow eye into the socket by turning it clockwise until it stops.

To install the tow hook covers:

1. Remove the tow eye.
2. Engage the lower tabs.
3. Press in the upper tabs to engage.

Recreational Vehicle Towing

Caution
Dolly towing or dinghy towing the vehicle may cause damage because of reduced ground clearance. Always put the vehicle on a flatbed truck or trailer.

The vehicle was neither designed nor intended to be towed with any of its wheels on the ground. If the vehicle must be towed, see *Towing the Vehicle* ⇨ *261*.

Appearance Care

Exterior Care

Locks

Locks are lubricated at the factory. Use a de-icing agent only when absolutely necessary, and have the locks greased after using. See *Recommended Fluids and Lubricants* ⇨ *273*.

Washing the Vehicle

To preserve the vehicle's finish, wash it often and out of direct sunlight.

Caution

Do not use petroleum-based, acidic, or abrasive cleaning agents as they can damage the vehicle's paint, metal, or plastic parts. If damage occurs, it would not be covered by the vehicle warranty. Approved cleaning products can be obtained from

(Continued)

Caution (Continued)

your dealer. Follow all manufacturer directions regarding correct product usage, necessary safety precautions, and appropriate disposal of any vehicle care product.

Caution

Avoid using high-pressure washers closer than 30 cm (12 in) to the surface of the vehicle. Use of power washers exceeding 8,274 kPa (1,200 psi) can result in damage or removal of paint and decals.

Caution

Do not power wash any component under the bonnet that has this  symbol.

(Continued)

Caution (Continued)

This could cause damage that would not be covered by the vehicle warranty.

Caution

Vehicles equipped with an accessory ground effects package have reduced ground clearance. Damage can occur in automatic car washes, when approaching kerbs, or on steep inclines. Do not use automatic car washes. Approach curbs and inclines with caution.

If using an automatic car wash, comply with the car wash instructions. The windscreen wiper and rear window wiper, if equipped, must be off. Remove any accessories that may be damaged or interfere with the car wash equipment.

Rinse the vehicle well, before washing and after, to remove all cleaning agents completely. If they are allowed to dry on the surface, they could stain.

Dry the finish with a soft, clean chamois or an all-cotton towel to avoid surface scratches and water spotting.

Finish Care

Application of aftermarket clearcoat sealant/wax materials is not recommended. If painted surfaces are damaged, see your dealer to have the damage assessed and repaired. Foreign materials such as calcium chloride and other salts, ice melting agents, road oil and tar, tree sap, bird droppings, chemicals from industrial chimneys, etc., can damage the vehicle's finish if they remain on painted surfaces. Wash the vehicle as soon as possible. If necessary, use non-abrasive cleaners that are marked safe for painted surfaces to remove foreign matter.

Occasional hand waxing or mild polishing should be done to remove residue from the paint finish. See your dealer for approved cleaning products.

Do not apply waxes or polishes to uncoated plastic, vinyl, rubber, decals, simulated wood, or flat paint as damage can occur.

Caution

Machine compounding or aggressive polishing on a base coat/clear coat paint finish may damage it. Use only non-abrasive waxes and polishes that are made for a base coat/clear coat paint finish on the vehicle.

To keep the paint finish looking new, keep the vehicle garaged or covered whenever possible.

Protecting Exterior Bright Metal Mouldings

Caution

Failure to clean and protect the bright metal mouldings can result in a hazy white finish or pitting. This damage would not be covered by the vehicle warranty.

The bright metal mouldings on the vehicle are aluminium. To prevent damage always follow these cleaning instructions:

- Be sure the moulding is cool to the touch before applying any cleaning solution.
- Use a cleaning solution approved for aluminium. Some cleaners are highly acidic or contain alkaline substances and can damage the mouldings.
- Always dilute a concentrated cleaner according to the manufacturer's instructions.
- Do not use chrome cleaners.

- Do not use cleaners that are not intended for automotive use.
- Use a nonabrasive wax on the vehicle after washing to protect and extend the moulding finish.

Convertible Top Care

Frequently hand wash convertible tops with mild car wash soap. Never use a stiff brush, steam, bleach, or aggressive cleaners.
If necessary, a soft brush can be used to remove dirt. When finished cleaning, thoroughly rinse the fabric. Avoid automatic car washes with overhead brushes or very high pressure sprays as they can cause damage and leaking.

Only lower the top when it is completely dry and avoid leaving the top lowered for extended periods of time to prevent excessive interior weathering.

Avoid leaving large amounts of snow on the top for extended periods of time as damage may also occur.

Bonnet Air Extractor



It is not recommended that the air extractor on the SS be waxed, as it will change the gloss level of the surface. In addition, care must be used when waxing around the air extractor. If a small amount of wax is applied to the extractor it can create an irregular appearance in the surface of the panel. If wax, debris, or other materials create stains on the air extractor, see your dealer for the recommended cleaner.

The air extractor has vent screens in the openings. Keep leaves or other debris out of the vent screens.

Caution
Pushing on the vent screens could damage them. Do not push on the screens when clearing.

There is a water deflector on the underside of the air extractor. Do not remove it.

Cleaning Exterior Lamps/ Lenses, Emblems, Decals, and Stripes

Use only lukewarm or cold water, a soft cloth, and a car washing soap to clean exterior lamps, lenses, emblems, decals, and stripes. Follow instructions under "Washing the Vehicle" previously in this section.

Lamp covers are made of plastic, and some have a UV protective coating. Do not clean or wipe them while they are dry.

Do not use any of the following on lamp covers:

- Abrasive or caustic agents.
- Washer fluids and other cleaning agents in higher concentrations than suggested by the manufacturer.
- Solvents, alcohols, fuels, or other harsh cleaners.
- Ice scrapers or other hard items.
- Aftermarket appearance caps or covers while the lamps are illuminated, due to excessive heat generated.

Caution

Failure to clean lamps properly can cause damage to the lamp cover that would not be covered by the vehicle warranty.

Caution

Using wax on low gloss black finish stripes can increase the gloss level and create a non-uniform finish. Clean low gloss stripes with soap and water only.

Air Intakes

Clear debris from the air intakes, between the bonnet and windscreen, when washing the vehicle.

Windscreen and Wiper Blades

Clean the outside of the windscreen with glass cleaner.

Clean rubber blades using lint-free cloth or paper towel soaked with windscreen washer fluid or a mild detergent. Wash the windscreen thoroughly when cleaning the blades. Insects, road grime, sap, and a build-up of vehicle wash/wax treatments may cause wiper streaking.

Replace the wiper blades if they are worn or damaged. Damage can be caused by extreme dusty conditions, sand, salt, heat, sun, snow and ice.

Weatherstrips

Apply Dielectric silicone grease on weatherstrips to make them last longer, seal better, and not stick or squeak. Lubricate weatherstrips at least once a year. Hot, dry climates may require more frequent application. Black marks from rubber material on painted surfaces can be removed by rubbing with a clean cloth. See *Recommended Fluids and Lubricants* ⇨ *273*.

Tyres

Use a stiff brush with tyre cleaner to clean the tyres.

Caution

Using petroleum-based tyre dressing products on the vehicle may damage the paint finish and/

(Continued)

Caution (Continued)

or tyres. When applying a tyre dressing, always wipe off any overspray from all painted surfaces on the vehicle.

Wheels and Trim — Aluminium or Chrome

Use a soft, clean cloth with mild soap and water to clean the wheels. After rinsing thoroughly with clean water, dry with a soft, clean towel. A wax may then be applied.

Caution

Chrome wheels and other chrome trim may be damaged if the vehicle is not washed after driving on roads that have been sprayed with magnesium, calcium, or sodium chloride. These chlorides are used on roads for conditions such as ice and dust. Always wash the chrome with soap and water after exposure.

Caution

To avoid surface damage, do not use strong soaps, chemicals, abrasive polishes, cleaners, brushes, or cleaners that contain acid on aluminium or chrome-plated wheels. Use only approved cleaners. Also, never drive a vehicle with aluminium or chrome-plated wheels through an automatic car wash that uses silicone carbide tyre cleaning brushes. Damage could occur and the repairs would not be covered by the vehicle warranty.

Brake System

Visually inspect brake lines and hoses for proper hook-up, binding, leaks, cracks, chafing, etc. Inspect disc brake pads for wear and discs for surface condition. Inspect drum brake linings/shoes for wear or cracks. Inspect all other brake parts.

Steering, Suspension, and Chassis Components

Visually inspect steering, suspension, and chassis components for damaged, loose, or missing parts or signs of wear at least once a year.

Inspect power steering for proper attachment, connections, binding, leaks, cracks, chafing, etc.

Visually check constant velocity joint boots and axle seals for leaks.

Body Component Lubrication

Lubricate all key lock cylinders, bonnet hinges, tailgate hinges, and steel fuel door hinge unless the components are plastic. Applying silicone grease on weatherstrips with a clean cloth will make them last longer, seal better, and not stick or squeak.

Underbody Maintenance

At least twice a year, spring and fall, use plain water to flush any corrosive materials from the

underbody. Take care to thoroughly clean any areas where mud and other debris can collect.

Do not directly power wash the transfer case and/or front/rear axle output seals. High pressure water can overcome the seals and contaminate the fluid. Contaminated fluid will decrease the life of the transfer case and/or axles and should be replaced.

Sheet Metal Damage

If the vehicle is damaged and requires sheet metal repair or replacement, make sure the body repair shop applies anti-corrosion material to parts repaired or replaced to restore corrosion protection.

Original manufacturer replacement parts will provide the corrosion protection while maintaining the vehicle warranty.

Finish Damage

Quickly repair minor chips and scratches with touch-up materials available from your dealer to avoid corrosion. Larger areas of finish damage can be corrected in your dealer's body and paint shop.

Chemical Paint Spotting

Airborne pollutants can fall upon and attack painted vehicle surfaces causing blotchy, ring-shaped discolourations, and small, irregular dark spots etched into the paint surface. See “Finish Care” previously in this section.

Floor Mats

⚠ Warning

If a floor mat is the wrong size or is not properly installed, it can interfere with the pedals. Interference with the pedals can cause unintended acceleration and/or increased stopping distance which can cause a crash and injury. Make sure the floor mat does not interfere with the pedals.

Use the following guidelines for proper floor mat usage.

- The original equipment floor mats were designed for your vehicle. If the floor mats need replacing, it is recommended that GM certified floor mats be purchased. Non-GM floor mats may not fit properly and may interfere with the pedals. Always check that the floor mats do not interfere with the pedals.
- Do not use a floor mat if the vehicle is not equipped with a floor mat retainer on the driver side floor.
- Use the floor mat with the correct side up. Do not turn it over.
- Do not place anything on top of the driver side floor mat.
- Use only a single floor mat on the driver side.
- Do not place one floor mat on top of another.

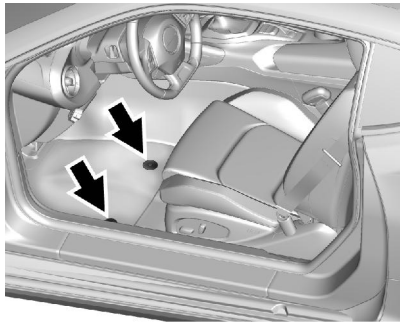

The driver side floor mat is held in place by two hook-type retainers.

Removing and Replacing the Driver Side Floor Mat

1. Pull up on the rear of the mat to remove it from the hooks.
2. Reinstall by lining up the floor mat retainer openings over the carpet retainers and hook into position.
3. Make sure the floor mat is properly secured in place. Verify the floor mat does not interfere with the pedals.

Service and Maintenance

General Information
General Information 270

Scheduled Maintenance
Scheduled Maintenance 270

Recommended Fluids, Lubricants, and Parts
Recommended Fluids and Lubricants 273
Maintenance Replacement Parts 274

General Information

It is essential that your vehicle receives the maintenance outlined on the following pages to retain the safety, reliability and performance originally built into your vehicle.

When your odometer reaches the mileage indicated on the following pages, or the corresponding time interval has been reached, take your vehicle, preferably to an authorised dealer and/or repairer, who will provide the proper parts and service.

Once maintenance has been performed, have the authorised dealer and/or repairer fill out and stamp the appropriate box in this booklet to serve as your maintenance record which may be needed for warranty repairs. It will also show future owners how well your vehicle has been maintained.

Scheduled Maintenance

Engine Oil Change

When the CHANGE ENGINE OIL SOON message displays, have the engine oil and filter changed within the next 1,000 km/600 mi. If driven under the best conditions, the engine oil life system may not indicate the need for vehicle service for up to a year. The engine oil and filter must be changed at least once a year and the oil life system must be reset. Your trained dealer technician can perform this work. If the engine oil life system is reset accidentally, service the vehicle within 5,000 km/3,000 mi since the last service. Reset the oil life system when the oil is changed.

Inspection Every 15 000 km or 1 Year

- Change engine oil and filter. Reset oil life system.
- Engine coolant level check.

- Engine cooling system inspection. Visual inspection of hoses, pipes, fittings, and clamps and replacement, if needed.
- Windscreen washer fluid level check.
- Windscreen wiper blade inspection for wear, cracking, or contamination and windscreen and wiper blade cleaning, if contaminated. Worn or damaged wiper blade replacement.
- Tyre inflation pressures check.
- Tyre wear inspection.
- Fluids visual leak check. A leak in any system must be repaired and the fluid level checked.
- Engine air cleaner filter inspection.
- Brake system inspection. See *Exterior Care* ⇨ *263*.
- Steering and suspension inspection. Visual inspection for damaged, loose, or missing parts or signs of wear.
- Body hinges and latches, key lock cylinders, folding seat hardware, and rear compartment, bonnet, and console door hinges and latches lubrication. More frequent lubrication may be required when the vehicle is exposed to a corrosive environment. Applying silicone grease on weatherstrips with a clean cloth makes them last longer, seal better, and not stick or squeak.
- Restraint system component check.
- Visually inspect fuel system for damage or leaks.
- Exhaust system and nearby heat shields inspection for loose or damaged components.
- Accelerator pedal check for damage, high effort, or binding.
- Bonnet/Deck lid/Tailgate/Lift glass Support Gas Strut Service: Visually inspect gas strut, if equipped, for signs of wear, cracks, or other damage. Check the hold open ability of the gas strut. Contact your authorised repairer if service is required.
- Road Test. Check all systems for correct function/performance.
- To maintain air conditioning efficiency, have an authorised repairer check the system at least once each year.
- Automatic transmission shift lock control function check.
- Parking brake and automatic P (Park) mechanism check.
- Underbody flushing service.
- Tyre sealant and compressor kit, check sealant expiration date.

Additional Maintenance Every 30 000 km or 2 Years

In addition to the items listed under “Inspection Every 15 000 km or 1 Year” the following items should be carried out every 30 000 km or 2 years (whichever occurs first):

- Passenger compartment air filter — replace. More frequent passenger compartment air filter

replacement may be needed if driving in areas with heavy traffic, poor air quality, high dust levels, or environmental allergens. Passenger compartment air filter replacement may also be needed if there is reduced airflow, window misting, or odours. Your GM retailer can help determine when to replace the filter.

- Engine Air Filter Replacement. If driving in dusty conditions, inspect the filter at each oil change or more often as needed.

Additional Maintenance Every 60 000 km

- Replace brake fluid (or every two years, whichever occurs first).

Additional Maintenance Every 72 000 km or if Necessary

- Automatic transmission fluid and filter change (severe service) for vehicles mainly driven in heavy city traffic in hot weather, in hilly or mountainous terrain, when frequently towing a trailer, or used for taxi, police, or delivery service.
- Manual gearbox fluid change. (Severe Service)
- Rear axle fluid change (normal service) for vehicles equipped with limited slip differential.
- Rear axle fluid change (severe service) for vehicles mainly driven in hilly or mountainous terrain, when frequently towing a trailer, used for high speed or competitive driving, or used for taxi, police, or delivery service. See your authorised repairer.

Additional Maintenance Every 80 000 km

- Visually check all fuel and vapour lines and hoses for proper attachment, connection, routing, and condition.

Additional Maintenance Every 96 000 km or if Necessary

- Spark plugs — replace (LTG 2.0L L4 Engine)

Additional Maintenance Every 150 000 km or if Necessary

- Spark plugs — replace (LT1 6.2L V8 Engine)

Additional Maintenance Every 250 000 km or Every Five Years, Whichever Occurs First

- Engine cooling system drain and refill (or every five years, whichever occurs first).

Conditions Requiring More Frequent Maintenance (Severe Service)

- Extreme temperatures
- Heavy city traffic
- Hilly or mountainous terrain
- Dusty, muddy or off-road conditions
- Commercial use or trailer towing
- Most trips less than 6 km (3.7 mi)

Recommended Fluids, Lubricants, and Parts

Recommended Fluids and Lubricants

Fluids and lubricants identified below by name, part number or specification can be obtained from your dealer.

Usage	Fluid/Lubricant
All: Weatherstrip	Synthetic Grease with Teflon, Superlube (GM Part No. 12371287).
Automatic Transmission	DEXRON®-HP Automatic Transmission Fluid (GM Part No. 19300536).
Engine Coolant	50/50 mixture of clean, drinkable water and use only DEX-COOL® Coolant. See *Engine Coolant* ⇨ *214*.
Engine Oil	Engine oil meeting the dexos2™ specification of the proper SAE viscosity grade. ACDelco dexos2 Synthetic Blend is recommended. See *Engine Oil* ⇨ *208*.
Bonnet Latch Assembly, Secondary Latch, Pivots, Spring Anchor and Release Pawl	Lubriplate Lubricant Aerosol (GM Part No. 89021668) or lubricant meeting requirements of NLGI #2, Category LB or GC-LB.
Hydraulic Brake/Clutch System	DOT 3 Hydraulic Brake Fluid (GM Part No. 19299818).
Key Lock Cylinders, Bonnet, Door, and Folding Seat Hinges	Multi-Purpose Lubricant, Superlube (GM Part No. 12346241).
Manual Gearbox (L4 Engine)	DEXRON®-VI Automatic Transmission Fluid.
Manual Transmission (V8 Engine)	Manual Gearbox Oil (GM Part No. 88861800).
Parking Brake Cable Guides	Chassis Lubricant (GM Part No. 12377985) or lubricant meeting requirements of NLGI #2, Category LB or GC-LB.

Usage	Fluid/Lubricant
Rear Axle (L4 Engine with Automatic Transmission)	Dexron non-LSD Gear Oil (GM Part No. 88863089).
Rear Axle (L4 Engine with Manual Gearbox)	Dexron LS Gear Oil (GM Part No. 88862624).
Rear Axle (V8 Engine)	Dexron LS Gear Oil (GM Part No. 88862624).
Weatherstrip Conditioning	Weatherstrip Lubricant (GM Part No. 3634770) or Dielectric Silicone Grease (GM Part No. 12345579).
Windscreen Washer	Automotive windscreen washer fluid that meets regional freeze protection requirements.

Maintenance Replacement Parts

Replacement parts identified below by name, part number, or specification can be obtained from your dealer.

Part	GM Part Number	ACDelco Part Number
Engine Air Cleaner/Filter		
2.0L L4 Engine	20857930	A3178C
6.2L V8 Engine	23323508	A3223C
Engine Oil Filter	12640445	PF64
Passenger Compartment Air Filter	13508023	CF185

Part	GM Part Number	ACDelco Part Number
Spark Plugs		
2.0L L4 Engine	12647827	41-125
6.2L V8 Engine	12622441	41–114
Wiper Blades		
Driver Side - 55.8 cm (22 in)	23360288	-
Passenger Side - 50.8 cm (20 in)	23360287	-

Technical Data

Vehicle Identification
Vehicle Identification Number (VIN) 276
Service Parts Identification Label 276

Vehicle Data
Capacities and Specifications 277
Engine Drive Belt Routing 280

Vehicle Identification

Vehicle Identification Number (VIN)



This legal identifier is in the front corner of the instrument panel, on the driver side of the vehicle. It can be seen through the windscreen from outside. The Vehicle Identification Number (VIN) also appears on the Vehicle Certification and Service Parts labels and certificates of title and registration.

Engine Identification

The eighth character in the VIN is the engine code. This code identifies the vehicle's engine, specifications, and replacement parts. See “Engine Specifications” under *Capacities and Specifications* ⇨ 277 for the vehicle's engine code.

Service Parts Identification Label

This label, in the boot, has the following information:

- Vehicle Identification Number (VIN).
- Model designation.
- Paint information.
- Production options and special equipment.

Do not remove this label from the vehicle.

Vehicle Data

Capacities and Specifications

Application	Capacities	
	Metric	English
Air Conditioning Refrigerant	For the air conditioning system refrigerant type and charge amount, see the refrigerant label under the bonnet. See your dealer for more information.	
Engine Cooling System		
2.0L L4 Engine	8.8 L	9.3 qt
6.2L V8 Engine with Auxiliary Cooler	13.21 L	13.96 qt
Engine Oil with Filter		
2.0L L4 Engine	5.2 L	5.5 qt
6.2L V8 Engine	9.5 L	10.0 qt
Fuel Tank	72.0 L	19.0 gal
Rear Axle Fluid		
2.0L L4 Engine	0.5 L	0.53 qt
6.2L V8 Engine	1.1 L	1.2 qt
Wheel Nut Torque	190 N•m	140 lb ft
*See *Automatic Transmission Fluid* ⇨ *211* for information on checking fluid level.		
All capacities are approximate. When adding, be sure to fill to the approximate level, as recommended in this manual. Recheck fluid level after filling.		

Engine Specifications

Engine	VIN Code	Horsepower	Torque	Spark Plug Gap
2.0L L4 Engine (LTG)	X	202 kW@5500 min^{-1} (275 hp@5500 rpm)	400 N•m@3000-4000 min^{-1} (295 lb ft@3000-4000 rpm)	0.75–0.90 mm (0.030–0.035 in)
6.2L V8 Engine (LT1)	7	333 kW@5700 min^{-1} (453 hp@5700 rpm)	617 N•m@4600 min^{-1} (455 lb ft@4600 rpm)	0.95–1.10 mm (0.037–0.043 in)

Fuel Consumption and Emissions Information

	Urban	Extra-Urban	Combined
2.0L L4 Engine Convertible			
Carbon Dioxide (g/km)	234	153	184
Fuel Economy (L/100 km)	10.3	6.7	8.1
2.0L L4 Engine Coupe			
Carbon Dioxide (g/km)	232	151	181
Fuel Economy (L/100 km)	10.2	6.6	8.0
6.2L V8 Engine Convertible with Automatic Transmission			
Carbon Dioxide (g/km)	401	179	260

Fuel Consumption and Emissions Information (cont'd)

	Urban	Extra-Urban	Combined
Fuel Economy (L/100 km)	17.5	7.9	11.5
6.2L V8 Engine Convertible with Manual Gearbox			
Carbon Dioxide (g/km)	418	207	285
Fuel Economy (L/100 km)	18.3	9.0	12.5
6.2L V8 Engine Coupe with Automatic Transmission			
Carbon Dioxide (g/km)	386	175	252
Fuel Economy (L/100 km)	17.0	7.7	11.1
6.2L V8 Engine Coupe with Manual Gearbox			
Carbon Dioxide (g/km)	434	209	292
Fuel Economy (L/100 km)	19.0	9.1	12.8

Engine Drive Belt Routing

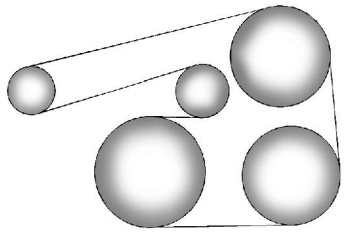

2.0L L4 Engine (LTG)

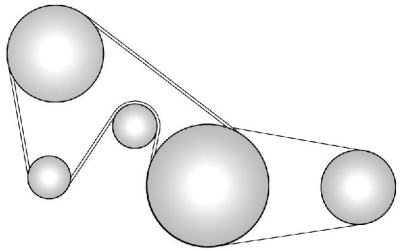

6.2L V8 Engine (LT1)

Customer Information

Customer Information
Libcurl and Unzip Acknowledgements 281
Declaration of Conformity 284

Vehicle Data Recording and Privacy
Vehicle Data Recording and Privacy 285

Customer Information

Libcurl and Unzip Acknowledgements

OnStar - Software Acknowledgements

Certain OnStar components include libcurl and unzip software and other third party software. Below are the notices and licenses associated with libcurl and unzip and for other third party software please see http://www.lg.com/global/support/opensource/index and https://www.onstar.com/us/en/support/getdocuments.html

The original language of the licenses is English, the translations below are provided for reference.

libcurl:

COPYRIGHT AND PERMISSION NOTICE

Copyright (c) 1996 - 2010, Daniel Stenberg, <daniel@haxx.se>.

All rights reserved.

Permission to use, copy, modify, and distribute this software for any purpose with or without fee is hereby granted, provided that the above copyright notice and this permission notice appear in all copies.

THE SOFTWARE IS PROVIDED "AS IS," WITHOUT WARRANTY OF ANY KIND, EXPRESS OR IMPLIED, INCLUDING BUT NOT LIMITED TO THE WARRANTIES OF MERCHANTABILITY, FITNESS FOR A PARTICULAR PURPOSE AND NONINFRINGEMENT OF THIRD PARTY RIGHTS. IN NO EVENT SHALL THE AUTHORS OR COPYRIGHT HOLDERS BE LIABLE FOR ANY CLAIM, DAMAGES OR OTHER LIABILITY, WHETHER IN AN ACTION OF CONTRACT, TORT OR OTHERWISE, ARISING FROM, OUT OF OR IN CONNECTION WITH THE SOFTWARE OR THE USE OR OTHER DEALINGS IN THE SOFTWARE.

Except as contained in this notice, the name of a copyright holder shall not be used in advertising or

otherwise to promote the sale, use or other dealings in this Software without prior written authorization of the copyright holder.

unzip:

This is version 2005-Feb-10 of the Info-ZIP copyright and license. The definitive version of this document should be available at ftp://ftp.info-zip.org/pub/infozip/license.html indefinitely.

Copyright (c) 1990-2005 Info-ZIP. All rights reserved.

For the purposes of this copyright and license, "Info-ZIP" is defined as the following set of individuals:

Mark Adler, John Bush, Karl Davis, Harald Denker, Jean-Michel Dubois, Jean-loup Gailly, Hunter Goatley, Ed Gordon, Ian Gorman, Chris Herborth, Dirk Haase, Greg Hartwig, Robert Heath, Jonathan Hudson, Paul Kienitz, David Kirschbaum, Johnny Lee, Onno van der Linden, Igor Mandrichenko, Steve P. Miller, Sergio Monesi, Keith Owens, George Petrov, Greg Roelofs, Kai Uwe Rommel, Steve Salisbury, Dave Smith, Steven M. Schweda, Christian Spieler, Cosmin Truta, Antoine Verheijen, Paul von Behren, Rich Wales, Mike White.

This software is provided "as is," without warranty of any kind, express or implied. In no event shall Info-ZIP or its contributors be held liable for any direct, indirect, incidental, special or consequential damages arising out of the use of or inability to use this software.

Permission is granted to anyone to use this software for any purpose, including commercial applications, and to alter it and redistribute it freely, subject to the following restrictions:

1. Redistributions of source code must retain the above copyright notice, definition, disclaimer, and this list of conditions.
2. Redistributions in binary form (compiled executables) must reproduce the above copyright notice, definition, disclaimer, and this list of conditions in documentation and/or other materials provided with the distribution. The sole exception to this condition is redistribution of a standard UnZipSFX binary (including SFXWiz) as part of a self-extracting archive; that is permitted without inclusion of this license, as long as the normal SFX banner has not been removed from the binary or disabled.
3. Altered versions–including, but not limited to, ports to new operating systems, existing ports with new graphical interfaces, and dynamic, shared, or static library versions–must be plainly marked as such and must not be misrepresented as being the original source. Such altered versions also must not be misrepresented as being Info-ZIP releases–including, but not limited to, labeling of the altered versions with the names "Info-ZIP" (or any variation thereof, including, but not limited to, different capitalizations), "Pocket UnZip," "WiZ" or "MacZip"

without the explicit permission of Info-ZIP. Such altered versions are further prohibited from misrepresentative use of the Zip-Bugs or Info-ZIP e-mail addresses or of the Info-ZIP URL(s).

4. Info-ZIP retains the right to use the names “Info-ZIP,” “Zip,” “UnZip,” “UnZipSFX,” “WiZ,” “Pocket UnZip,” “Pocket Zip,” and “MacZip” for its own source and binary releases.

libcurl:

COPYRIGHT AND PERMISSION NOTICE

Copyright (c) 1996 - 2010, Daniel Stenberg, <daniel@haxx.se>.

All rights reserved.

Permission to use, copy, modify, and distribute this software for any purpose with or without fee is hereby granted, provided that the above copyright notice and this permission notice appear in all copies.

THE SOFTWARE IS PROVIDED “AS IS,” WITHOUT WARRANTY OF ANY KIND, EXPRESS OR IMPLIED, INCLUDING BUT NOT LIMITED TO THE WARRANTIES OF MERCHANTABILITY, FITNESS FOR A PARTICULAR PURPOSE AND NONINFRINGEMENT OF THIRD PARTY RIGHTS. IN NO EVENT SHALL THE AUTHORS OR COPYRIGHT HOLDERS BE LIABLE FOR ANY CLAIM, DAMAGES OR OTHER LIABILITY, WHETHER IN AN ACTION OF CONTRACT, TORT OR OTHERWISE, ARISING FROM, OUT OF OR IN CONNECTION WITH THE SOFTWARE OR THE USE OR OTHER DEALINGS IN THE SOFTWARE.

Except as contained in this notice, the name of a copyright holder shall not be used in advertising or otherwise to promote the sale, use or other dealings in this Software without prior written authorisation of the copyright holder.

unzip:

This is version 2005-Feb-10 of the Info-ZIP copyright and license. The definitive version of this document should be available at ftp://ftp.info-zip.org/pub/infozip/license.html indefinitely.

Copyright (c) 1990-2005 Info-ZIP. All rights reserved.

For the purposes of this copyright and license, “Info-ZIP” is defined as the following set of individuals:

Mark Adler, John Bush, Karl Davis, Harald Denker, Jean-Michel Dubois, Jean-loup Gailly, Hunter Goatley, Ed Gordon, Ian Gorman, Chris Herborth, Dirk Haase, Greg Hartwig, Robert Heath, Jonathan Hudson, Paul Kienitz, David Kirschbaum, Johnny Lee, Onno van der Linden, Igor Mandrichenko, Steve P. Miller, Sergio Monesi, Keith Owens, George Petrov, Greg Roelofs, Kai Uwe Rommel, Steve Salisbury, Dave Smith, Steven M. Schweda, Christian Spieler, Cosmin Truta, Antoine Verheijen, Paul von Behren, Rich Wales, Mike White

This software is provided "as is," without warranty of any kind, express or implied. In no event shall Info-ZIP or its contributors be held liable for any direct, indirect, incidental, special or consequential damages arising out of the use of or inability to use this software.

Permission is granted to anyone to use this software for any purpose, including commercial applications, and to alter it and redistribute it freely, subject to the following restrictions:

1. Redistributions of source code must retain the above copyright notice, definition, disclaimer, and this list of conditions.
2. Redistributions in binary form (compiled executables) must reproduce the above copyright notice, definition, disclaimer, and this list of conditions in documentation and/or other materials provided with the distribution. The sole exception to this condition is redistribution of a standard UnZipSFX binary (including SFXWiz) as part of a self-extracting archive; that is permitted without inclusion of this license, as long as the normal SFX banner has not been removed from the binary or disabled.
3. Altered versions–including, but not limited to, ports to new operating systems, existing ports with new graphical interfaces, and dynamic, shared, or static library versions–must be plainly marked as such and must not be misrepresented as being the original source. Such altered versions also must not be misrepresented as being Info-ZIP releases–including, but not limited to, labelling of the altered versions with the names "Info-ZIP" (or any variation thereof, including, but not limited to, different capitalisations), "Pocket UnZip," "WiZ" or "MacZip" without the explicit permission of Info-ZIP. Such altered versions are further prohibited from misrepresentative use of the Zip-Bugs or Info-ZIP e-mail addresses or of the Info-ZIP URL(s).
4. Info-ZIP retains the right to use the names "Info-ZIP," "Zip," "UnZip," "UnZipSFX," "WiZ," "Pocket UnZip," "Pocket Zip," and "MacZip" for its own source and binary releases.

Declaration of Conformity

Transmission Systems

This vehicle has systems that transmit and/or receive radio waves subject to Directive 1999/5/EC or 2014/53/EU. These systems are in compliance with the essential requirements and other relevant provisions of Directive 1999/5/EC or 2014/53/EU. Copies of the original Declarations of Conformity can be obtained on our website.

Vehicle Data Recording and Privacy

Event Data Recorders

Data Storage Modules in the Vehicle

A large number of electronic components of your vehicle contain data storage modules temporarily or permanently storing technical data about the condition of the vehicle, events, and errors. In general, this technical information documents the condition of parts, modules, systems, or the environment:

- Operating conditions of system components (e.g., filling levels).
- Status messages of the vehicle and its single components (e.g., number of wheel revolutions/ rotational speed, deceleration, lateral acceleration).
- Dysfunctions and defects in important system components.
- Vehicle reactions in particular driving situations (e.g., inflation of an airbag, activation of the stability regulation system).
- Environmental concerns (e.g., temperature).

This data is exclusively technical and helps identify and correct errors as well as optimise vehicle functions.

Motion profiles indicating travelled routes cannot be created with this data.

If services are used (e.g., repair works, service processes, warranty cases, quality assurance), employees of the service network (manufacturer included) are able to read out this technical information from the event and error data storage modules applying special diagnostic devices. If required, you will receive further information at these dealers. After an error has been corrected, the data is deleted from the error storage module or constantly overwritten.

When using the vehicle, situations may occur in which this technical data related to other information (accident report, damages on the vehicle, witness statements, etc.) may be associated with a specific person — possibly, with the assistance of an expert.

Additional functions contractually agreed upon with the client (e.g., vehicle location in emergency cases) allow the transmission of particular vehicle data from the vehicle.

OnStar

OnStar Overview
OnStar Overview 286

OnStar Overview

OnStar® system

OnStar is a personal connectivity and service assistant with integrated Wi-Fi hotspot. The OnStar service is available 24 hours a day, seven days a week.

Note: OnStar is not available for all markets. For further information, contact your retailer.

Note: In order to be available and operational, OnStar needs a valid OnStar subscription, functioning vehicle electrics, mobile service and GPS satellite link.

To activate the OnStar services and set up an account, press On and speak with an advisor.

Depending on the equipment of the vehicle, the following services are available:

- Emergency services and support in the case of a vehicle breakdown
- Wi-Fi hotspot
- Smartphone application
- Remote control, e.g. location of the vehicle, activation of horn and lights, control of central locking system
- Stolen vehicle assistance
- Vehicle diagnostics
- Destination download

Note: The OnStar module of the vehicle is deactivated after ten days without an ignition cycle. Functions requiring a data connection will be available again after switching on the ignition.

OnStar buttons



Privacy button

Press and hold until an audio message is heard to activate or deactivate the transmission of the vehicle location.

Press to answer a call or to end a call to an advisor.

Press to access the Wi-Fi settings.

Service button

Press to establish a connection to an advisor.

SOS button

Press to establish a priority emergency connection to a specially trained emergency advisor.

Status LED

- Three Colour Icons: The system is enabled and active.
- No Icons: The vehicle is in motion or the OnStar subscription is inactive.
- Flashing: Button has been pressed.
- Solid: On a call.
- : Indicates a problem.

The icon will flash for a short period of time when the user turns off the Privacy Settings feature. The icon will flash in the same manner at each ignition on, while this feature is Inactive.

OnStar services

General services

If you need any information concerning e.g. opening hours, point of interest and destinations or if you need any support e.g. in the case of a vehicle breakdown, a flat tyre and empty fuel tank, press to establish a connection to an advisor.

Emergency services

In the case of an emergency situation, press and talk to an advisor. The advisor then contacts emergency or assistance service providers and directs them to your vehicle.

In the case of an accident with activation of airbags or belt tensioners, an automatic emergency call is established. The advisor is immediately connected to your vehicle to see whether help is needed.

Wi-Fi hotspot

The Wi-Fi hotspot of the vehicle provides internet connectivity with a maximum speed of 4G/LTE.

The Wi-Fi hotspot functionality is not available for all markets.

Up to seven devices may be connected.

To connect a mobile device with the Wi-Fi hotspot:

1. Press and then select Wi-Fi settings on the Info-Display. The settings displayed include the Wi-Fi hotspot name (SSID), password and, if equipped, connection type.
2. Start a Wi-Fi network search on your mobile device.
3. Select your vehicle hotspot (SSID) when listed.
4. When prompted, enter the password on your mobile device.

Note: To change the SSID or password, press ⓞ and talk to an advisor or login to your account.

To switch off the Wi-Fi hotspot functionality, press ⓞ to call an advisor.

Smartphone app

With the smartphone app, some vehicle functions can be operated remotely:

- Lock or unlock vehicle.
- Honk horn or flash lights.
- Check fuel level, engine oil life, if equipped, and tyre pressure (only with tyre pressure monitoring system).
- Send navigation destination to the vehicle, if equipped with a built-in navigation system.
- Locate vehicle on a map.
- Manage Wi-Fi settings.

To operate these functions, download the app from Apple's App Store or Google Play Store.

Remote control

If desired, use any phone to call an advisor, who can remotely operate specific vehicle functions. Find the respective OnStar phone number on our country-specific website.

The following functions are available:

- Lock or unlock doors vehicle.
- Provide information on the vehicle location.
- Honk horn or flash lights.

Stolen vehicle assistance

If the vehicle is stolen, report the theft to the authorities and request OnStar stolen vehicle assistance. Use any phone to call an advisor. Find the respective OnStar phone number on our country-specific website.

OnStar can provide support in locating and recovering the vehicle.

Theft alert

When the anti-theft alarm system is triggered, a notification is sent to OnStar. You are then informed about this event by text message or email.

Restart prevention

By sending remote signals, OnStar can prevent the vehicle from restarting once it has been turned off.

On-demand diagnostics

At any time e.g. if the vehicle displays a vehicle message, press ⓞ to contact an advisor and ask to complete a real-time diagnostic check to directly determine the issue. Depending on the results, the advisor will provide further support.

Diagnostic report

The vehicle automatically transmits diagnostic data to OnStar which sends a monthly email report to you and your preferred retailer.

Note: The retailer notification function can be disabled in your account.

The report contains the status of key operating systems of the vehicle like the engine, transmission, airbags, ABS, and other major systems. It also provides information on possible maintenance items and tyre pressure (only with tyre pressure monitoring system).

To look at the information in greater detail, select the link within the email and log into your account.

Destination download

If equipped with this feature, a desired destination can be directly downloaded to the navigation system.

Press ⓞ to call an advisor and describe the destination or point of interest.

The advisor can look up any address or point of interest and directly send the destination to the built-in navigation system.

OnStar settings

OnStar PIN

To have full access to all OnStar services, a four-digit PIN is required. The PIN has to be personalised when first talking to an advisor.

To change the PIN, press ⓞ to call an advisor.

Account data

An OnStar subscriber has an account, where all the data is stored. To request a change of the account information, press ⓞ and talk to an advisor or login to your account.

If the OnStar service is used on another vehicle, press ⓞ and request that the account be transferred to the new vehicle.

Note: In any case, if the vehicle is disposed of, sold or otherwise transferred, immediately inform OnStar about the changes and terminate the OnStar service on this vehicle.

Vehicle location

The vehicle location is transmitted to OnStar when service is requested or triggered. A message on the Info-Display informs about this transmission.

To activate or deactivate the transmission of the vehicle location, press and hold ⓝ until an audio message is heard.

When sending of the vehicle location is deactivated, the ⓝ icon will flash for a short period of time. The ⓝ icon will flash in the same manner at each ignition on, while this feature is Inactive.

Note: If the transmission of the vehicle location is deactivated, some services are no longer available.

Note: The vehicle location always remains accessible to OnStar in the case of an emergency.

Find the privacy policy in your account.

Software updates

OnStar may remotely carry out software updates without further notice or consent. These updates are to enhance or maintain safety and security or the operation of the vehicle.

These updates may concern privacy issues. Find the privacy policy in your account.

Index

A

Accessories and Modifications 203
Accessory Power 170
Acknowledgements
Libcurl and Unzip 281
Active Fuel Management® 172
Active Rev Match 178
Add-On Electrical Equipment ... 201
Air Cleaner/Filter, Engine 212
Air Conditioning 146, 149
Air Filter, Passenger Compartment 152
Air Vents 152
Airbag System
Check 75
How Does an Airbag Restrain? 68
Passenger Sensing System 70
What Makes an Airbag Inflate? 68
What Will You See after an Airbag Inflates? 68
When Should an Airbag Inflate? 67
Where Are the Airbags? 65
Airbags
Adding Equipment to the Vehicle 74
Passenger Status Indicator ... 108
Readiness Light 107
Servicing Airbag-Equipped Vehicles 74
System Check 63
Alarm
Vehicle Security 37
Alert
Lane Change 196
Side Blind Zone (SBZA) 195
All-Season Tyres 236
Antilock Brake System (ABS) ... 179
Warning Light 112
Appearance Care
Exterior 263
Assistance Systems for Parking and Reversing 193
Automatic
Climate Control System 146
Dimming Mirrors 40
Door Locks 33
Headlamp System 139
Transmission 173
Transmission Fluid 211

Automatic Transmission
Manual Mode 175
Shift Lock Control Function Check 224
Axle, Rear 223

B

Battery 222
Exterior Lighting Battery Saver 144
Jump Starting 258
Load Management 144
Power Protection 144
Voltage and Charging Messages 121
Blade Replacement, Wiper 224
Bonnet 204
Brake
Parking, Electric 180
System Warning Light 111
Brakes 220
Antilock 179
Assist 182
Fluid 221
System Messages 121
Braking 155
Bulb Replacement 228
Front Indicator Lamps 226
Halogen Bulbs 226
Bulb Replacement (cont'd)
Headlamp Aiming 225
Headlamps 226
High Intensity Discharge (HID) Lighting 226
License Plate Lamps 228
Position Lamps 142
Reversing Lamps 227
Buying New Tyres 247

C

Capacities and Specifications 277
Carbon Monoxide
Boot 34
Engine Exhaust 172
Caution, Danger, and Warning 2
Centre Console Storage 92
Chains, Tyre 250
Charging
Wireless 97
Charging System Light 109
Check
Malfunction Indicator Engine Light 109
Child Restraints
Infants and Young Children 77
ISOFIX 86
Older Children 76
Child Restraints (cont'd)
Securing 86, 88
Systems 80
Circuit Breakers 229
Cleaning
Exterior Care 263
Climate Control Systems
Automatic 146
Dual Automatic 149
Clock 96
Cluster, Instrument 99
Clutch, Hydraulic 211
Compartments
Storage 91
Competitive Driving Mode 188
Compressor Kit, Tyre Sealant 251
Conformity
Declaration of 284
Control
Traction and Electronic Stability 182
Control of a Vehicle 155
Convenience Net 92
Convertible Top 45
Messages 122
Convex Mirrors 39

Coolant
Engine 214
Engine Temperature Gauge .. 105
Cooling System 213
Engine Messages 123
Cruise Control 190
Light 115
Messages 123

D

Danger, Warning, and Caution 2
Daytime Running
Lamps (DRL) 139
Declaration of Conformity 284
Defensive Driving 154
Delayed Locking 33
Distracted Driving 154
Door
Ajar Light 115
Ajar Messages 123
Delayed Locking 33
Locks 31
Power Locks 33
Drive Belt Routing, Engine 280
Driver Assistance Systems 193
Driver Information
Centre (DIC) 116
Driver Mode Control 184
Driving
Competitive 188
Defensive 154
For Better Fuel Economy 22
Hill and Mountain Roads 162
If the Vehicle is Stuck 163
Loss of Control 156
Off-Road Recovery 156
Track Events and
Competitive 157
Vehicle Load Limits 164
Wet Roads 161
Dual Automatic Climate
Control System 149

E

Electric Parking Brake 180
Electric Parking Brake Light 111
Electrical Equipment,
Add-On 201
Electrical System
Engine Compartment Fuse
Block 229
Fuses and Circuit Breakers ... 229
Overload 228
Rear Compartment Fuse
Block 233
Engine
Air Cleaner/Filter 212
Engine (cont'd)
Check and Service Engine
Soon Light 109
Compartment Overview 205
Coolant 214
Coolant Temperature
Gauge 105
Cooling System 213
Cooling System Messages ... 123
Drive Belt Routing 280
Exhaust 172
Oil Life System 210
Oil Messages 124
Oil Pressure Gauge 104
Oil Pressure Light 114
Overheating 218
Power Messages 124
Running While Parked 173
Starting 168
Entry Lighting 143
Exit Lighting 143
Extended Parking 172
Exterior Lamp Controls 138
Exterior Lighting Battery
Saver 144

F

Features
Memory 11
Filter,
Engine Air Cleaner 212
Flash-to-Pass 139
Flat Tyre 250
Floor Mats 268
Fluid
Automatic Transmission 211
Brakes 221
Washer 219
Fog Lamp Light, Rear 115
Fog Lamps 141
Front Indicator Lamps 226
Front Seats
Heated and Ventilated 56
Fuel 198
Additives 198
Economy Driving 22
Filling a Portable Fuel Container 200
Filling the Tank 198
Gauge 103
Low Fuel Warning Light 114
Management, Active 172
System Messages 125
Fuses
Engine Compartment Fuse Block 229
Fuses and Circuit Breakers ... 229
Rear Compartment Fuse Block 233

G

Gauges
Engine Coolant Temperature 105
Engine Oil Pressure 104
Fuel 103
Mileometer 103
Rev Counter 103
Speedometer 103
Trip Odometer 103
Voltmeter 106
Warning Lights and Indicators 98
General Information
Service and Maintenance 270
Towing 201
Vehicle Care 203
Glove Box 91

H

Halogen Bulbs 226
Hazard Warning Flashers 141
Head Restraints 52
Head-up Display 117
Headlamp Levelling Control 140
Headlamps
Aiming 225
Automatic 139
Bulb Replacement 226
Daytime Running Lamps (DRL) 139
Flash-to-Pass 139
High Intensity Discharge (HID) Lighting 226
Lamps On Reminder 115
Main-Beam On Light 115
Main/Dipped Beam Changer 139
Position Lamps 142
Heated
Steering Wheel 94
Heated and Ventilated Front Seats 56
Heated Mirrors 40
Heating 146, 149
High-Speed Operation 240
Hill and Mountain Roads 162

Hill Start Assist (HSA) 182
Horn 95
How to Wear Safety Belts Properly 59
Hydraulic Clutch 211

I
Ignition Positions 166
Immobilizer 38
Indicator and Lane-Change Signals 141
Infants and Young Children, Restraints 77
Infotainment 145
Instrument Cluster 99
Interior Lamps 142
Interior Rearview Mirrors 41
Introduction 2
ISOFIX Child Restraint Systems 86

J
Jump Starting 258

K
Key and Lock Messages 125
Keyless Entry Remote (RKE) System 24
Keys 23

L
Lamps
Daytime Running (DRL) 139
Exterior Controls 138
Exterior Lighting Battery Saver 144
Front Indicator 226
Interior 142
Malfunction Indicator 109
Messages 125
Number Plate 228
On Reminder 115
Reading 143
Lane Change Alert (LCA) 196
Lap-Shoulder Belt 60
Latches, Seat-Back 55
Levelling Control Headlamp 140
Libcurl and Unzip Acknowledgements 281
Lighting
Entry 143
Exit 143
Illumination Control 142
Theatre Dimming 143
Lights
Airbag Readiness 107
Lights (cont'd)
Antilock Brake System (ABS) Warning 112
Brake System Warning 111
Charging System 109
Cruise Control 115
Door Ajar 115
Electric Parking Brake 111
Engine Oil Pressure 114
Flash-to-Pass 139
Fog Lamp, Rear 115
Low Fuel Warning 114
Main-Beam On 115
Main/Dipped Beam Changer 139
Safety Belt Reminders 107
Security 114
Service Electric Parking Brake 112
StabiliTrak® OFF 113
Traction Control System (TCS)/StabiliTrak® 113
Traction Off 112
Tyre Pressure 113
Lights, Hazard 141
Limited-Slip Rear Axle 190
Locks
Automatic Door 33

Locks (cont'd)
Delayed Locking 33
Door 31
Lockout Protection 33
Power Door 33
Loss of Control 156
Low Fuel Warning Light 114
Low-Profile Tyres 238

M

Main-Beam On Light 115
Maintenance Schedule
Recommended Fluids and Lubricants 273
Scheduled Maintenance 270
Malfunction Indicator Lamp 109
Manual Mode 175
Manual Transmission 178
Fluid 211
Matching
Active Rev 178
Memory Features 11
Memory Seats 54
Messages
Airbag System 127
Battery Voltage and Charging 121
Brake System 121
Convertible Top 122
Messages (cont'd)
Door Ajar 123
Engine Cooling System 123
Engine Oil 124
Engine Power 124
Fuel System 125
Key and Lock 125
Lamp 125
Object Detection System 125
Ride Control System 126
Security 127
Service Vehicle 127
Starting the Vehicle 128
Steering System 128
Transmission 129
Tyre 128
Vehicle 121
Vehicle Reminder 130
Vehicle Speed 130
Window 130
Mileometer 103
Trip 103
Mirrors
Automatic Dimming 40
Automatic Dimming Rear View 41
Convex 39
Heated 40
Mirrors (cont'd)
Manual Rearview 41
Power 40
Tilt in Reverse 40
Mirrors, Interior Rearview 41
Mode 184
Driver Control 184
Monitor System, Tyre Pressure 240

N

Net, Convenience 92
New Vehicle Running-In 165

O

Object Detection System Messages 125
Off-Road Recovery 156
Oil
Engine 208
Engine Oil Life System 210
Engine Oil Pressure Gauge 104
Messages 124
Pressure Light 114
Older Children, Restraints 76
OnStar® Overview 286
Operation
Fog Lamps 141

Outlets
Power 96
Overheating, Engine 218

P

Park
Shifting Into 170
Shifting Out of 171
Parking 171
Brake and P (Park)
Mechanism Check 224
Extended 172
Over Things That Burn 171
Parking Assist 193
Parking or Reversing
Assistance Systems 193
Passenger Airbag Status
Indicator 108
Passenger Compartment Air
Filter 152
Passenger Sensing System 70
Personalisation
Vehicle 131
Power
Door Locks 33
Mirrors 40
Outlets 96
Protection, Battery 144
Retained Accessory (RAP) ... 170
Power (cont'd)
Seat Adjustment 52
Windows 42
Pregnancy, Using Safety Belts ... 62
Privacy
Vehicle Data Recording 285

R

Reading Lamps 143
Rear Axle 223
Limited-Slip 190
Rear Fog Lamp Light 115
Rear Seats 57
Rear Storage 91
Rear View Mirrors 41
Automatic Dimming 41
Rear Vision Camera (RVC) 193
Reclining Seat Backrests 53
Recommended Fluids and
Lubricants 273
Recreational Vehicle Towing 262
Remote Keyless Entry (RKE)
System 24
Remote Vehicle Start 29
Replacement Bulbs 228
Replacement Parts
Airbags 75
Maintenance 274
Replacing Airbag System 75
Replacing Safety Belt System
Parts after a Crash 63
Restraints
Where to Put 81
Retained Accessory
Power (RAP) 170
Rev Counter 103
Reverse Tilt Mirrors 40
Ride Control Systems
Limited Slip Rear Axle 190
Messages 126
Roads
Driving, Wet 161
Roof
Sunroof 44
Rotation, Tyres 245
Routing, Engine Drive Belt 280
Run-Flat Tyres 237
Running the Vehicle While
Parked 173
Running-In, New Vehicle 165

S

Safety Belts 58
Care 62
How to Wear Safety Belts
Properly 59
Lap-Shoulder Belt 60
Reminders 107

Safety Belts (cont'd)
Replacing after a Crash 63
Use During Pregnancy.....62
Safety System Check..... 62
Scheduled Maintenance 270
Sealant Kit, Tyre 251
Seat-Back Latches 55
Seats
Head Restraints 52
Heated and Ventilated Front 56
Memory.....54
Power Adjustment, Front 52
Rear 57
Reclining Seat Backrests 53
Securing Child Restraints 86, 88
Security
Light 114
Messages 127
Vehicle 37
Vehicle Alarm.....37
Service 152
Accessories and
Modifications 203
Doing Your Own Work 204
Engine Soon Light 109
Maintenance, General
Information 270
Parts Identification Label 276
Service (cont'd)
Vehicle Messages 127
Service Electric Parking
Brake Light..... 112
Servicing the Airbag 74
Shift Lock Control Function
Check, Automatic
Transmission 224
Shifting
Into Park..... 170
Out of Park 171
Side Blind Zone Alert (SBZA) ...195
Signals, Turn and
Lane-Change 141
Specifications and
Capacities.....277
Speedometer 103
StabiliTrak
OFF Light.....113
Start Assist, Hill.....182
Start Vehicle, Remote 29
Starter Switch Check 223
Starting the Engine 168
Starting the Vehicle
Messages 128
Steering 155
Heated Wheel 94
Wheel Adjustment 94
Steering (cont'd)
Wheel Controls 94
Steering System Messages 128
Storage
Rear 91
Storage Areas
Centre Console 92
Convenience Net 92
Glove Box 91
Storage Compartments 91
Storing the Tyre Sealant and
Compressor Kit 258
Stuck Vehicle 163
Summer Tyres 238
Sun Visors..... 44
Sunroof..... 44
Symbols 2
System
Infotainment 145
Systems
Driver Assistance 193

T

Theatre Dimming 143
Theft-Deterrent Systems..... 38
Immobiliser 38
Time 96
Towing
General Information 201

Towing (cont'd)
Recreational Vehicle 262
Vehicle 261
Track Events and
Competitive Driving 157
Traction
Control System (TCS)/
StabiliTrak® Light 113
Limited-Slip Rear Axle 190
Off Light 112
Traction Control/Electronic
Stability Control 182
Transmission
Automatic 173
Fluid, Automatic 211
Fluid, Manual 211
Messages 129
Triangle, Warning 92
Trip Odometer 103
Trunk 34
Tyres 235
All-Season 236
Buying New Tyres 247
Chains 250
Different Size 248
If a Tyre Goes Flat 250
Inspection 244
Low Profile 238
Tyres (cont'd)
Messages 128
Pressure 240
Pressure Light 113
Pressure Monitor Operation .. 241
Pressure Monitor System 240
Rotation 245
Run-Flat 237
Sealant and
Compressor Kit 251
Sealant and Compressor
Kit, Storing 258
Wheel Alignment and Tyre
Balance 249
Wheel Replacement 249
When It Is Time for New
Tyres 246
Winter 236

U

Using This Manual 2

V

Vehicle
Alarm System 37
Control 155
Identification Number (VIN) ... 276
Load Limits 164
Messages 121
Vehicle (cont'd)
Personalisation 131
Reminder Messages 130
Remote Start 29
Security 37
Speed Messages 130
Towing 261
Vehicle Care
Storing the Tyre Sealant
and Compressor Kit 258
Tyre Pressure 239
Vehicle Data Recording and
Privacy 285
Ventilation, Air 152
Visors 44
Voltmeter Gauge 106

W

Warning
Brake System Light 111
Caution and Danger 2
Warning Lights, Gauges, and
Indicators 98
Warning Triangle 92
Warnings
Hazard Lights 141
Washer Fluid 219

Wheels
Alignment and Tyre Balance 249
Different Size 248
Replacement 249
When It Is Time for New Tyres 246
Where to Put the Restraint 81
Windows 41
Messages 130
Power 42
Windshield
Replacement 225
Wiper/Washer 95
Winter Tyres 236
Wiper Blade Replacement 224
Wireless Charging 97